Lenovo ideapad 100

ideapad 100-14IBD

User Guide

Read the safety notices and important tips in the included manuals before using your computer.

ideapad

Notes

- Before using the product, be sure to read Lenovo *Safety and General Information Guide* first.
- The latest electronic compliance and environmental information are available from the Lenovo compliance information Web sites.
  - To view compliance information go to: http://www.lenovo.com/compliance
  - To download environmental information go to: http://www.lenovo.com/ecodeclaration
- Some instructions in this guide may assume that you are using Windows® 10. If you are using another Windows operating system, some operations may be slightly different. If you are using other operating systems, some operations may not apply to you.
- The features described in this guide are common to most models. Some features may not be available on your computer or your computer may include features that are not described in this user guide.
- The illustrations in this manual may differ from the actual product. Please refer to the actual product.

Regulatory Notice

- For details, refer to **Guides & Manuals** at http://support.lenovo.com.

First Edition (August 2015)

© Copyright Lenovo 2015.

LIMITED AND RESTRICTED RIGHTS NOTICE: If data or software is delivered pursuant to a General Services Administration "GSA" contract, use, reproduction, or disclosure is subject to restrictions set forth in Contract No. GS-35F-05925.

Contents

Chapter 1. Getting to know your computer **1**
Top view 1
Left-side view 5
Right-side view 8
Front view 9
Bottom view 11
Chapter 2. Starting to use Windows 10 ..... **12**
Configuring the operating system for the first time 12
Operating system interface 12
Putting the computer to sleep or shutting it down 14
Task and desktop management 16
Connecting to a wireless network 17
Get Started app 17
Chapter 3. Lenovo OneKey Recovery System **18**
Chapter 4. Troubleshooting **19**
Frequently asked questions 19
Troubleshooting 21
Appendix A. CRU instructions **25**
Removing the keyboard 25
Removing the optical drive 27
Trademarks **29**

Chapter 1. Getting to know your computer

Top view

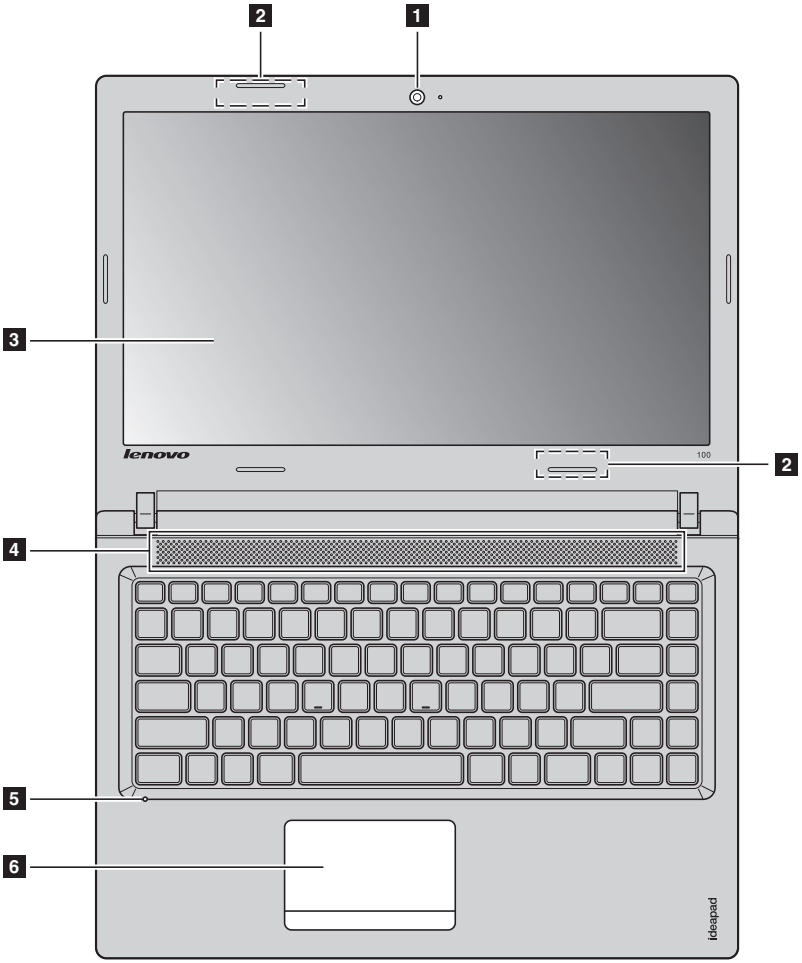

Note: The dashed areas indicate parts that are not visible externally.

Attention:

- When closing the display panel, be careful *not* to leave pens or any other objects in between the display panel and the keyboard. Otherwise, the display panel may be damaged.

1	**Integrated camera**	Use the camera for video communication.
2	**Wireless LAN antennas**	Connect to a wireless LAN adapter to send and receive wireless radio signals.
3	**Computer display**	Provides brilliant visual output.
4	**Speaker**	Provides audio output.
5	**Built-in microphone**	Captures sound which can be used for video conferencing, voice narration, or audio recording.
6	**Touchpad**	The touchpad functions as a conventional mouse. **Touchpad:** To move the pointer on the screen, slide your fingertip over the pad in the direction in which you want the pointer to move. **Touchpad buttons:** The functions of the left/right side correspond to that of the left/right mouse button on a conventional mouse.

Note: You can enable/disable the touchpad by pressing **F6** (F6).

Using the keyboard

Function key combinations

Through the use of the function keys, you can change operational features instantly. To use this function, press and hold **Fn** **1**; then press one of the function keys **2**.

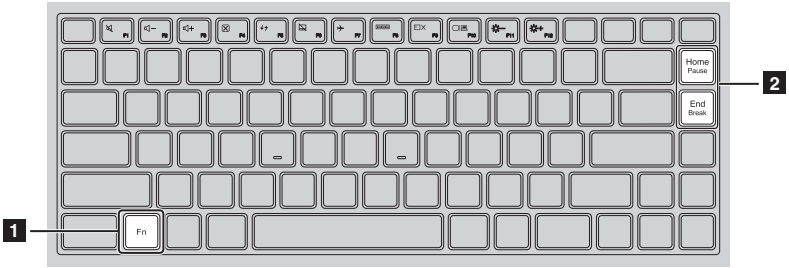

The following describes the features of each function key.

Fn + Home:	Activates the pause function.
Fn + End:	Activates the break function.

Hotkeys

You can access certain system settings quickly by pressing the appropriate hotkeys.

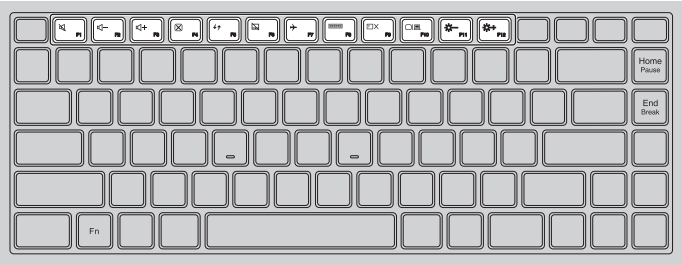

F1	:	Mutes/unmutes the sound.	F7	:	Enables/disables Airplane mode.
F2	:	Decreases the volume level.	F8	:	Displays all currently active apps.
F3	:	Increases the volume level.	F9	:	Turns on/off the backlight of the LCD screen.
F4	:	Closes the currently active window.	F10	:	Toggles the display between the computer and an external device.
F5	:	Refreshes the desktop or the currently active window.	F11	:	Decreases the display brightness.
F6	:	Enables/disables the touchpad.	F12	:	Increases the display brightness.

Setting hotkey mode

By default, the hotkey functions are accessible by pressing the appropriate hotkey. However, you can disable the hotkey mode in the BIOS setup utility.
To disable the hotkey mode:

1. Shut down the computer.
2. Press the Novo button and then select **BIOS Setup**.
3. In the BIOS setup utility, open the **Configuration** menu, and change the setting of **HotKey Mode** from **Enabled** to **Disabled**.
4. Open the **Exit** menu, and select **Exit Saving Changes**.

Note: When hotkey mode is disabled, press the **Fn** key and the appropriate hotkey to access the corresponding hotkey function.

Left-side view

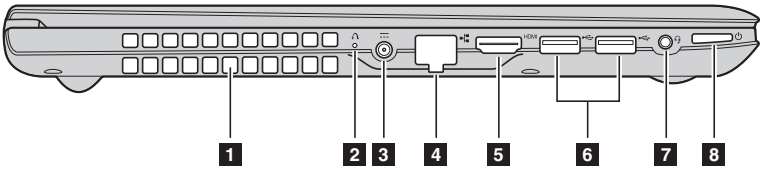

1	**Ventilation slots**	Dissipate internal heat.

Note: Make sure that the ventilation slots are not blocked or else the computer may overheat.

2	**Novo button**	When the computer is off, press this button to start the Lenovo OneKey Recovery System or the BIOS setup utility, or to enter the boot menu.

Notes:
- You can use the tip of an unfolded paper clip (or similar object without a sharp tip) to gently press the Novo button.
- For details, see “Lenovo OneKey Recovery System” on page 18.

3	**AC power adapter jack**	Connects to the AC power adapter.
4	**RJ-45 port**	Connects the computer to an Ethernet network.

Note: For details, see “Connecting network cables” on page 6.

5	**HDMI port**	Connects to devices with HDMI input such as a TV or an external display.
6	**USB port**	Connects to USB devices.

Note: For details, see “Connecting USB device” on page 7.

7	**Combo audio jack**	Connects to headsets.

Notes:
- The combo audio jack does not support conventional microphones.
- The recording function might not be supported if third-party headphones or headsets are connected, due to different industry standards.

8	**Power button**	Press this button to turn on the computer.

Connecting network cables

Wired connections are a reliable and safe way to connect the computer to the Internet. You can connect a network cable to your computer.

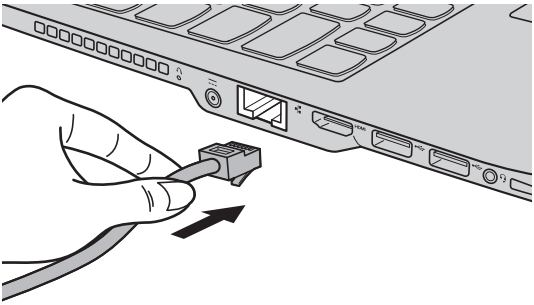

Software configuration

Consult your Internet Service Provider (ISP) for details on how to configure your computer.

Connecting USB device

Your computer comes with two USB ports compatible with USB devices.

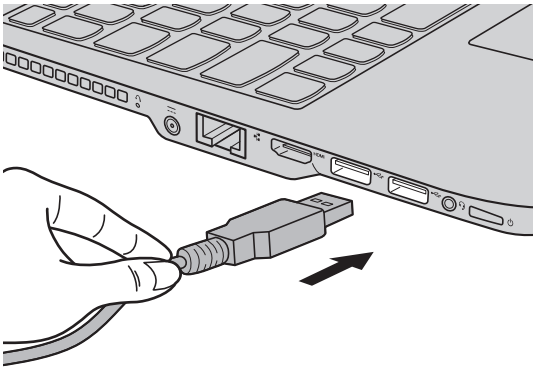

The first time you plug a USB device into a particular USB port on your computer, Windows automatically installs a driver for that device. After the driver has been installed, you can disconnect and reconnect the device without performing any additional steps.

Note: Typically, Windows detects a new device after it has been connected, and then installs the driver automatically. However, some devices may require you to install the driver before connecting. Check the documentation provided by the device's manufacturer before connecting the device.

Before disconnecting a USB storage device, make sure your computer has finished transferring data to that device. Click the **Safely Remove Hardware and Eject Media** icon in the Windows notification area to remove the device before disconnecting.

Note: If your USB device uses a power cord, connect the device to a power source before connecting it. Otherwise, the device may not be recognized.

Right-side view

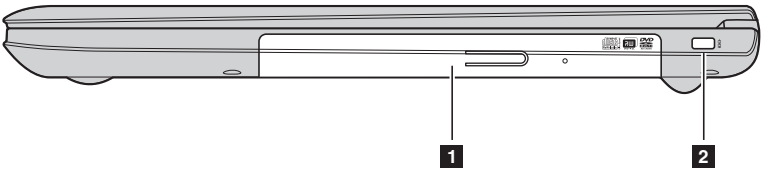

1	**Optical drive (on select models)**	Reads/burns optical discs.
2	**Kensington lock slot**	Attach a security lock (not supplied) here to help protect your computer from theft and unauthorized use. You can attach a security lock to your computer to help prevent it from being removed without your permission. For details on installing the security lock, please refer to the instructions shipped with the security lock that you have purchased.

Notes:
- Before purchasing any security product, verify that it is compatible with this type of security keyhole.
- You are responsible for evaluating, selecting, and implementing the locking devices and security features. Lenovo offers no comment, judgment, or warranty regarding the function, quality, or performance of locking devices and security features.

Front view

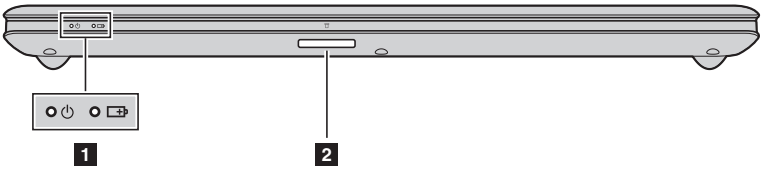

1 **System status indicators**

2 **Memory card slot** Accepts memory cards (not supplied).

Note: For details, see “Using memory cards (not supplied)” on page 10.

Symbol	Indicator	Indicator status	Charge status	Meaning
	Power	On (solid white)	---	The computer is powered on.
		Blinking	---	The computer is in sleep mode.
		Off	---	The computer is powered off.
	Battery	On (solid white)	Charging	The battery has more than 80% charge.
			Discharging	The battery has more than 20% charge.
		On (solid amber)	Discharging	The battery has between 5% and 20% charge.
		Blinking slowly (white)	Charging	The battery has between 20% and 80% charge. When the battery reaches 80% charge, the light will stop blinking. However, charging will continue until the battery is fully charged.
		Blinking slowly (amber)	Charging	The battery has less than 20% charge. When the battery charge reaches 20%, the blinking color will change to white.
		Blinking quickly (amber)	Charging/ Discharging	The battery has less than 5% charge.

Using memory cards (not supplied)

Your computer supports the following types of memory cards:

- Secure Digital (SD) card
- Secure Digital High Capacity (SDHC) card
- Secure Digital eXtended Capacity (SDXC) card
- MultiMediaCard (MMC)

Notes:
- Insert *only* one card in the slot at a time.
- This card reader does not support SDIO devices (e.g., SDIO Bluetooth, etc.).

Inserting a memory card

Insert the memory card until it touches the bottom of the slot.

Removing a memory card

Gently pull the memory card out of the memory card slot.

Note: Before removing the memory card, disable it by using the Windows safely remove hardware and eject media utility to avoid data corruption.

Bottom view

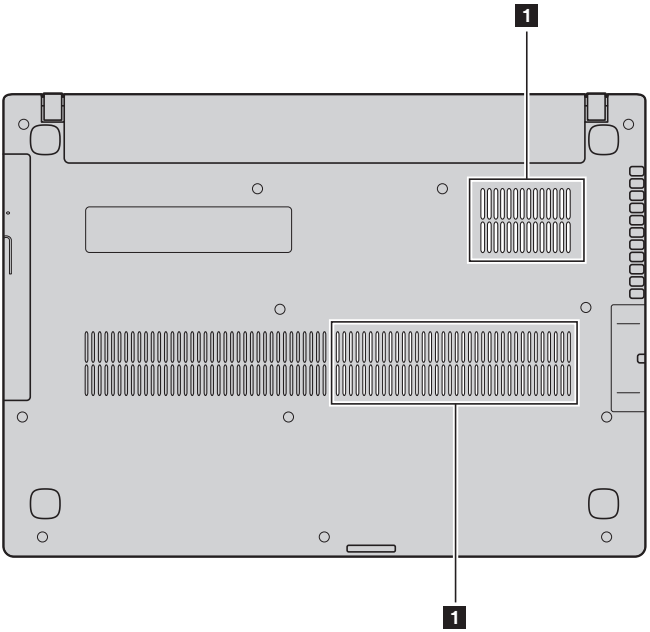

1	**Louvers**	Allow air to enter the computer for cooling.

Chapter 2. Starting to use Windows 10

Configuring the operating system for the first time

You may need to configure the operating system when it is first used.
The configuration process may include the procedures below:

- Accepting the end user license agreement
- Configuring the Internet connection
- Registering the operating system
- Creating a user account

Operating system interface

Windows 10 comes with a powerful and useful start menu.
To open the start menu, do one of the following:

- Press the Windows key on the keyboard.
- Select **Start** on the lower-left corner of the desktop.

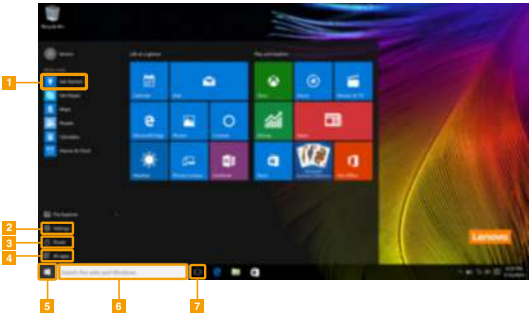

1 **Get Started app**
2 **Settings button**
3 **Power button**
4 **All apps button**
5 **Start button**
6 **Search box**
7 **Task view button**

Settings

Settings lets you perform basic tasks. You can also search for more settings with the settings search box in the upper-right corner.
To open the settings, do the following:

- Open the start menu, and then select **Settings** .

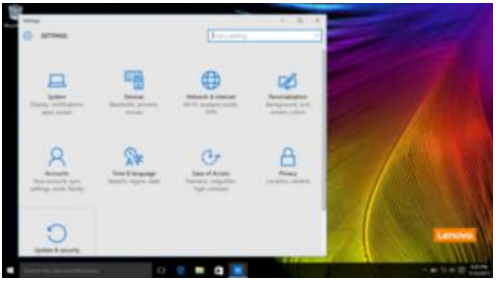

Personalize the start menu

You can personalize the start menu with your favorite apps.
To personalize the start menu, do the following:

1. Open the start menu, and then select **All apps** to display the apps list.
2. Right click the app you want to add to the start menu, and then select **Pin to Start**.

Note: You can also drag apps from the **Most used** or **All apps** columns to add them to the start menu.

Putting the computer to sleep or shutting it down

When you have finished working with your computer, you can put it to sleep or shut it down.

Putting your computer to sleep

If you will be away from your computer for only a short time, put the computer to sleep. When the computer is in sleep mode, you can quickly wake it to resume use, bypassing the startup process.

To put the computer to sleep, do one of the following:

- Close the display lid.
- Press the Power button.
- Open the start menu, and then select **Power** ⏻ → **Sleep**.

Note: Wait until the power indicator light starts blinking (indicating that the computer is in sleep mode) before you move your computer. Moving your computer while the hard disk is spinning can damage the hard disk, causing loss of data.

To wake the computer, do one of the following:

- Press any key on the keyboard.
- Press the Power button.

Shutting down the computer

If you are not going to use your computer for a long time, shut it down.
To shut down the computer, do one of the following:

- Open the start menu, and then select **Power** ⏻ → **Shut down**.

- Right-click the **Start** button in the lower-left corner and select **Shut down or sign out** → **Shut down**.

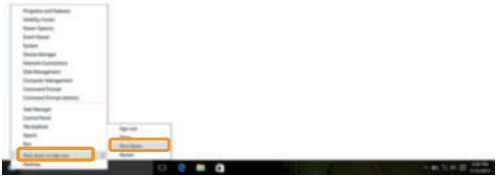

Task and desktop management

Task view

To open the task view, do one of the following:

- Select the Task view button on the task bar.
- Press the Windows key + Tab.

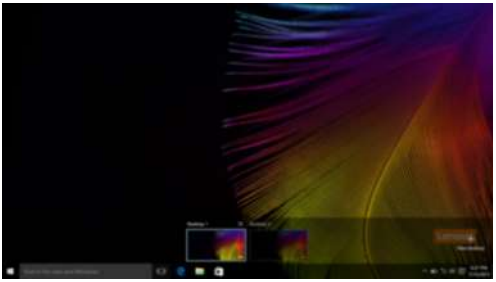

Virtual desktop management

Windows 10 supports the ability to create, manage and switch between virtual desktops.
To create a new virtual desktop, do one of the following:

- Open the task view, and then select **New desktop**.
- Press the Windows key + Ctrl + D.

To switch between different desktops, do one of the following:

- Open the task view and select the desktop you want active.
- Press the Windows key + Ctrl + ← / → to scroll through the desktops you've created.

Connecting to a wireless network

Enabling wireless connection

To enable wireless functions, do the following:

1. Press **F7** ( ) to disable airplane mode.
2. Click on the lower-right corner of the task bar to open the network configuration page.

Connecting to a wireless network

After wireless has been enabled, the computer will automatically scan for available wireless networks and display them in the wireless network list. To connect to a wireless network, click the network name in the list, and then click **Connect**.

Note: Some networks require a network security key or passphrase for connection. To connect to one of those networks, ask the network administrator or the Internet service provider (ISP) for the security key or passphrase.

Get Started app

Windows 10 also provides the **Get Started** app to explain the new features of Windows 10. You can find it on the start menu.
To open the Get Started app, do one of the following:

- Open the start menu and select **Get Started** .
- Press **Fn + F1** (depending on your keyboard layout).

Chapter 3. Lenovo OneKey Recovery System

The Lenovo OneKey Recovery System is software designed to back up and restore your computer. You can use it to restore the system partition to its original status in case of a system failure. You can also create user backups for easy restoration as required.

Notes:
- If your computer is preinstalled with a GNU/Linux operating system, OneKey Recovery System is not available.
- To utilize the features of the OneKey Recovery System, your hard disk already includes a hidden partition by default to store the system image file and the OneKey Recovery System program files. This default partition is hidden for security reasons, which explains why the available disk space is less than the stated capacity.

Backing up the system partition

You can back up the system partition to an image file. This image file can be used to restore the system partition. To back up the system partition:

1. In Windows, press the Novo button or double-click OneKey Recovery icon to start the Lenovo OneKey Recovery System.
2. Click **System Backup**.
3. Select a back-up location and click **Next** to start the backup.

Notes:
- You can choose a back-up location on the local hard disk drive or an external storage device.
- Remove the removable hard disk drive before starting the Lenovo OneKey Recovery System. Otherwise, data from the removable hard disk drive might be lost.
- The back-up process may take a while.
- The back-up process is only available when Windows can be started normally.

Restoring

You can choose to restore the system partition to its original status or to a previously created back-up point. To restore the system partition:

1. In Windows, press the Novo button or double-click OneKey Recovery icon to start the Lenovo OneKey Recovery System.
2. Click **System Recovery**. The computer will restart to the recovery environment.
3. Follow the on-screen instructions to restore the system partition to its original status or to a previously created back-up point.

Notes:
- The recovery process is irreversible. Make sure to back up any data you wish to save on the system partition before starting the recovery process.
- The recovery process may take a while. So be sure to connect the AC power adapter to your computer during the recovery process.
- The above instructions should be followed when Windows can be started normally.

If Windows cannot be started, then follow the steps below to start the Lenovo OneKey Recovery System:

1. Shut down the computer.
2. Press the Novo button. From **Novo Button Menu**, select **System Recovery** and press Enter.

Chapter 4. Troubleshooting

Frequently asked questions

This section lists frequently asked questions by category.

Finding information

What safety precautions should I follow when using my computer?

The Lenovo *Safety and General Information Guide* which came with your computer contains safety precautions for using your computer. Read and follow all the precautions when using your computer.

Where can I find the hardware specifications for my computer?

You can find the hardware specification for your computer on the printed flyers which came with your computer.

Where can I find warranty information?

For detailed warranty information on this machine, please visit below website to check out: support.lenovo.com/warrantystatus.

Drivers and preinstalled software

Where are the installation discs for Lenovo preinstalled software (desktop software)?

Your computer did not come with installation discs for Lenovo preinstalled software. If you need to reinstall any preinstalled software, you can find the installation program on the D partition of your hard disk. If you cannot find the installation program there, you can also download it from the Lenovo consumer support website.

Where can I find drivers for the various hardware devices of my computer?

If your computer is preinstalled with a Windows operating system, Lenovo provides drivers for all the hardware devices that you need on the D partition of your hard disk. You can also download the latest device drivers from the Lenovo consumer support website.

Lenovo OneKey Recovery System

Where are the recovery discs?

Your computer did not come with any recovery discs. Use the Lenovo OneKey Recovery System if you need to restore the system to its original factory status.

What can I do if the back-up process fails?

If you can start the backup but it fails during the back-up process, try the following steps:

1. Close all open programs, and then restart the back-up process.
2. Check to see if the destination media is damaged. Select another path and then try again.

When do I need to restore the system to its factory status?

Use this feature when the operating system fails to start up. If there is critical data on the system partition, back it up before starting recovery.

BIOS setup utility

What is the BIOS setup utility?

The BIOS setup utility is a ROM-based software. It displays basic computer information and provides options for setting boot devices, security, hardware mode, and other preferences.

How can I start the BIOS setup utility?

To start the BIOS setup utility:

1. Shut down the computer.
2. Press the Novo button and then select **BIOS Setup**.

Getting help

How can I contact the customer support center?

See “Chapter 3. Getting help and service” in the Lenovo *Safety and General Information Guide*.

Troubleshooting

Display problems

When I turn on the computer, nothing appears on the screen.	• If the screen is blank, make sure that: - The AC power adapter is connected to the computer, and plugged into a working electrical outlet. - The computer power is on. (Press the Power button again for confirmation.) • If these items are properly set, and the screen remains blank, have the computer serviced.
When I turn on the computer, only a white cursor appears on a blank screen.	• Restore backed-up files to your Windows environment or the entire contents of your hard disk to its original factory contents using the Lenovo OneKey Recovery System. If you still see only the cursor on the screen, have the computer serviced.
The screen goes blank while the computer is on.	• Your screen saver or power management may be enabled. Do one of the following to exit from the screen saver or to resume from sleep mode: - Touch the touchpad. - Press any key on the keyboard. - Press the Power button. - Press **F9** ( ) to confirm whether the backlight of the LCD screen has been turned off.

BIOS password problems

I forgot my password.	• If you forget your user password, ask the system administrator to clear your user password. • If you forget your hard disk drive password, a Lenovo authorized servicer cannot reset your password or recover data from the hard disk. You must take your computer to a Lenovo authorized servicer or a marketing representative to have the hard disk drive replaced. Proof of purchase is required, and a fee will be charged for parts and service. • If you forget your administrator password, a Lenovo authorized servicer cannot reset your password. You must take your computer to a Lenovo authorized servicer or a marketing representative to have the system board replaced. Proof of purchase is required, and a fee will be charged for parts and service.

Sleep problems

The critical low-battery error message appears, and the computer immediately turns off.	• The battery power is getting low. Connect the AC power adapter to the computer.
The computer enters sleep mode immediately after Power-on self-test (POST).	• Make sure that: - The battery pack is charged. - The operating temperature is within the acceptable range. See “Chapter 2. Use and care Information” in the Lenovo *Safety and General Information Guide*.

Note: If the battery pack is charged and the temperature is within range, have the computer serviced.

The computer does not return from sleep mode, and the computer does not work.	• If your computer is in sleep mode, connect the AC power adapter to the computer, then press any key or the Power button. • If the system still does not return from sleep mode, stops responding, or cannot be turned off, reset the computer. Unsaved data may be lost. To reset the computer, press and hold the Power button for four seconds or more. If the computer is still not reset, remove the AC power adapter.

Display panel problems

The screen is blank.	• Do the following: - If you are using the AC power adapter or the battery pack, and the battery status indicator is on, press **F12** (F12) to make the screen brighter. - If the power indicator is blinking, press the Power button to resume from sleep mode. - If the problem persists, follow the solution in the next problem “The screen is unreadable or distorted.” - Press **F9** (F9) to confirm whether the backlight of the LCD screen has been turned off.
The screen is unreadable or distorted.	• Make sure that: - The display device driver is installed correctly. - The screen resolution and color quality are correctly set. - The monitor type is correct.
Incorrect characters appear on the screen.	• Is the operating system or programs installed correctly? If they are installed and configured correctly, have the computer serviced.

Sound problems

No sound can be heard from the speaker even when the volume is turned up.	• Make sure that: - The Mute function is off. - The combo audio jack is not being used. - Speakers are selected as the playback device.

Battery pack problems

Your computer shuts down before the battery status indicator shows empty. -*or*- Your computer operates after the battery status indicator shows empty.	• Discharge and recharge the battery pack.
The computer does not operate with a fully charged battery pack.	• The surge protector in the battery pack might be active. Turn off the computer for one minute to reset the protector; then turn on the computer again.

A hard disk drive problem

The hard disk drive does not work.	• Make sure that the hard disk drive is included in the **Boot** menu in the BIOS setup utility correctly.

OneKey Recovery System problems

Backup cannot be made.	• Make sure that you are currently using a Windows operating system. • There may not be enough space to store the backed-up data. You will need to free more hard disk space on your backup's partition.
Failure to restore system partition to factory default.	• The system partition (e.g. the partition size or the drive capacity of C) has been modified.

Other problems

Your computer does not respond.	• To turn off your computer, press and hold the Power button for four seconds or more. If the computer still does not respond, remove the AC power adapter. • Your computer might lock when it enters sleep mode during a communication operation. Disable the sleep timer when you are working on the network.
The computer does not start from a device you want.	• See the **Boot** menu of the BIOS setup utility. Make sure that the BIOS setup utility is set so that the computer starts from the device you want. • Also make sure that the device from which the computer starts is enabled. Make sure that the device is included in the **Boot** menu in the BIOS setup utility correctly. • While turned off, press the Novo button to select the device you want the computer to start from.
The connected external device does not work.	• Do *not* connect or disconnect any external device cables other than USB while the computer power is on. Otherwise, you might damage your computer. • When using high power consumption external devices such as an external USB optical disk drive, use an external device power adapter. Otherwise, the device may not be recognized, or the system may shut down as a result.

Appendix A. CRU instructions

Note: The CRU service is only applicable to certain countries.

Removing the keyboard

To remove the keyboard, do the following:

1. Turn off the computer. Disconnect the AC power adapter and all cables from the computer.
2. Close the computer display, and then turn the computer over.
3. Remove the screws that secure the keyboard **1**.

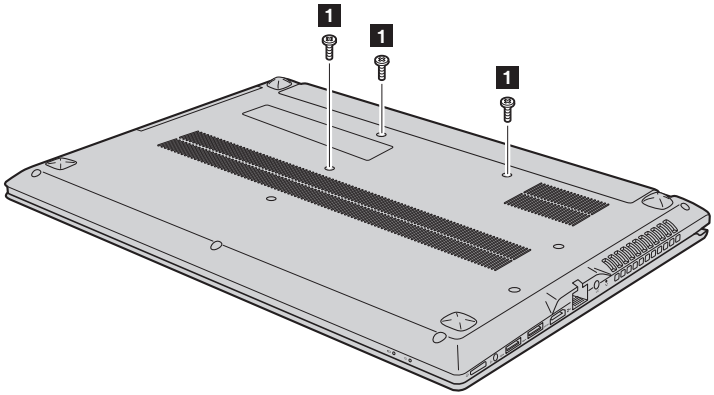

4. Turn the computer over, and then open the computer display.
5. Push the keyboard with the tip of an unfolded paper clip (or similar object without a sharp tip) through the screw hole on the back cover.

❻ Loosen the keyboard with fingers **2**, and then lift the keyboard slightly **3**.

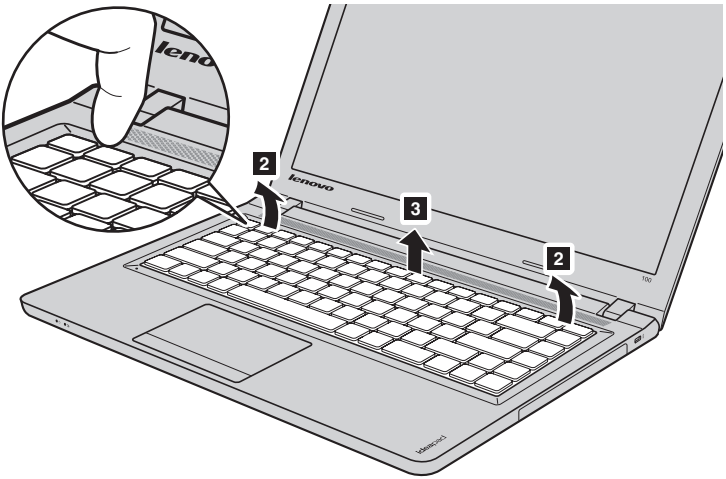

❼ Disconnect the keyboard connector in the direction shown by arrows **4** and **5**. Then remove the keyboard.

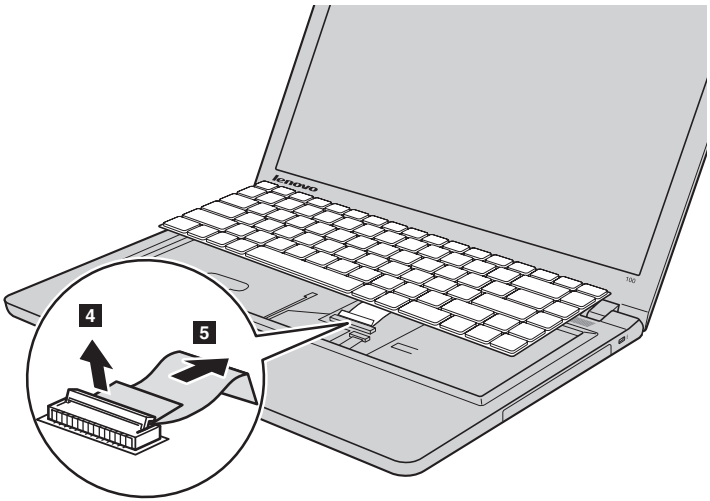

Removing the optical drive

To remove the optical drive, do the following:

1. Remove the screw shown in the illustration **1**.
2. Gently pull the optical drive out **2**.

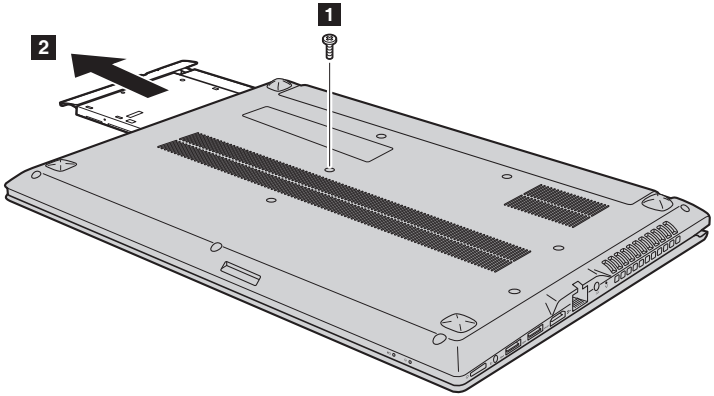

3. Remove the screw **3**, then remove the optical drive bracket in the direction shown by arrow **4**.

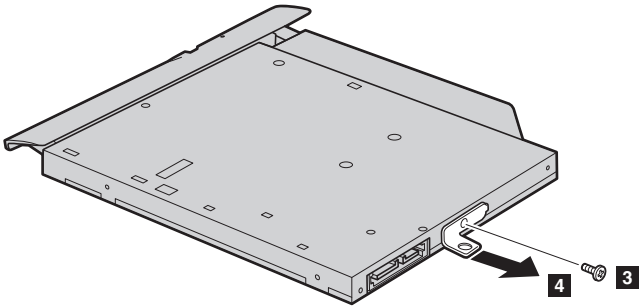

❹ Carefully remove the optical drive bezel in the direction shown by arrow **5**.

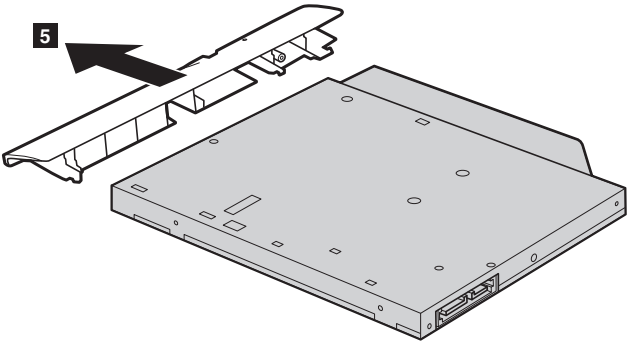

The following table provides a list of CRUs (Customer Replaceable Units) for your computer and informs you of where to find replacement instructions.

	Safety, Warranty, and Setup Guide	User Guide
AC power adapter	O	
Keyboard		O
Optical drive		O

Trademarks

The following terms are trademarks or registered trademarks of Lenovo in the United States, other countries, or both.

Lenovo
OneKey
ideapad

Microsoft and Windows are trademarks of Microsoft Corporation in the United States, other countries, or both.

Other company, products, or service names may be trademarks or service marks of others.

lenovo

©Lenovo China 2015

en-US
Rev. RP01