Lenovo 13w 2-in-1 Gen 3
Hardware Maintenance Manual

Lenovo

Third Edition (February 2026)

© Copyright Lenovo 2025, 2026.

LIMITED AND RESTRICTED RIGHTS NOTICE: If data or software is delivered pursuant to a General Services Administration “GSA” contract, use, reproduction, or disclosure is subject to restrictions set forth in Contract No. GS-35F-05925.

Contents

About this manual ii

Chapter 1. Safety information 1

General safety 1
Electrical safety 1
Safety inspection guide 3
Handling devices that are sensitive to electrostatic discharge 3
Grounding requirements 4
Safety notices (multilingual translations) 4

Chapter 2. General checkout 18

What to do first 18
Checking the ac power adapter 19
Checking the battery and operational charging . . 19

Chapter 3. Locations 21

Locating computer controls and connectors . . . 21
Front view 21
Side view 23
Bottom view 24
Locating FRUs and CRUs 25
Major FRUs and CRUs 26
LCD FRUs and CRUs 28
Miscellaneous parts 29
Looking up FRU information 29

Chapter 4. FRU replacement notices 30

Service tool kit 30
Screw notices 30

Chapter 5. Removing or replacing a FRU. 32

General guidelines 32
Before servicing the computer 32
Disable Fast Startup and the built-in battery . . 32
Lenovo Integrated Pen and pen dummy (for selected models) 33
Base cover assembly 33
Applying labels to the base cover assembly . . 35
Built-in battery 36
M.2 solid-state drive and M.2 solid-state drive bracket 39
Wireless LAN module 40
Memory module 41
Replaceable USB-C module and replaceable USB-C module bracket (for selected models) 42
Heat sink 44
Thermal fan 45
Coin-cell battery 46
Lenovo Integrated Pen charge board and cable (for selected models) 47
I/O brackets 48
Wireless LAN antenna assembly 50
Antenna locations 51
Speaker assembly 51
System board 52
For models with replaceable USB-C module 52
For models with non-replaceable USB-C module 54
How to input the product information with Lenovo system board self repair tool 55
Rear camera-and-microphone module and cable 56
Power button with or without fingerprint reader . . 57
For models with fingerprint reader 57
For models without fingerprint reader 59
LCD unit. 59
LCD strip cover 60
Touch module assembly 61
Gravity sensor board and LCD-and-camera cable 62
Camera-and-microphone module 63
LCD hinges 64
LCD cover assembly 65
Keyboard-and-trackpad assembly 65

Appendix A. Important notice for Quebec consumers 66

Appendix B. Notices 67

Appendix C. Abbreviation table 69

© Copyright Lenovo 2025, 2026

About this manual

This manual contains service and reference information for the following products:

Product name	Machine type (MT)
Lenovo 13w 2-in-1 Gen 3	83M9 and 83MA

Use this manual along with the advanced diagnostic tests to troubleshoot problems.

Important:

- This manual is intended only for trained service technicians who are familiar with products. Use this manual along with the advanced diagnostic tests to troubleshoot problems effectively.
- Depending on the model, some hardware configuration and software programs might not be available on the computer. Some statements in this manual might not be applicable to the computer.
- Before servicing a product, be sure to read all the information under Chapter 1 “Safety information” on page 1.

Chapter 1. Safety information

This chapter presents following safety information that you need to be familiar with before you service a notebook computer.

- “General safety” on page 1
- “Electrical safety” on page 1
- “Safety inspection guide” on page 3
- “Handling devices that are sensitive to electrostatic discharge” on page 3
- “Grounding requirements” on page 4
- “Safety notices (multilingual translations)” on page 4

General safety

Follow these rules to ensure general safety:

- Observe good housekeeping in the area of the machines during and after maintenance.
- When lifting any heavy object:
  1. Ensure that you can stand safely without slipping.
  2. Distribute the weight of the object equally between your feet.
  3. Use a slow lifting force. Never move suddenly or twist when you attempt to lift.
  4. Lift by standing or by pushing up with your leg muscles; this action removes the strain from the muscles in your back. Do not attempt to lift any object that weighs more than 16 kg (35 lb) or that you think is too heavy for you.
- Do not perform any action that causes hazards to the customer, or that makes the equipment unsafe.
- Before you start the machine, ensure that other service technicians and the customer's personnel are not in a hazardous position.
- Place removed covers and other parts in a safe place, away from all personnel, while you are servicing the machine.
- Keep your tool case away from walk areas so that other people will not trip over it.
- Do not wear loose clothing that can be trapped in the moving parts of a machine. Ensure that your sleeves are fastened or rolled up above your elbows. If your hair is long, fasten it.
- Insert the ends of your necktie or scarf inside clothing or fasten it with a nonconductive clip, about 8 centimeters (3 inches) from the end.
- Do not wear jewelry, chains, metal-frame eyeglasses, or metal fasteners for your clothing, because metal objects are good electrical conductors.
- Wear safety glasses when you are hammering, drilling, soldering, cutting wire, attaching springs, using solvents, or working in any other conditions that might be hazardous to your eyes.
- After service, reinstall all safety shields, guards, labels, and ground wires. Replace any safety device that is worn or defective.
- Reinstall all covers correctly before returning the machine to the customer.
- Fan louvers on the machine help to prevent overheating of internal components. Do not obstruct fan louvers or cover them with labels or stickers.

Electrical safety

Observe the following rules when working on electrical equipment.

© Copyright Lenovo 2025, 2026

Important:

- Use only approved tools and test equipment. Some hand tools have handles covered with a soft material that does not insulate you when working with live electrical currents.
- Many customers have, near their equipment, rubber floor mats that contain small conductive fibers to decrease electrostatic discharges (ESD). Do not use this type of mat to protect yourself from electrical shock.
- Find the room emergency power-off (EPO) switch, disconnecting switch, or electrical outlet. If an electrical accident occurs, you can then operate the switch or unplug the power cord quickly.
- Do not work alone under hazardous conditions or near equipment that has hazardous voltages.
- Disconnect all power before:
  - Performing a mechanical inspection
  - Working near power supplies
  - Removing or installing main units
- Before you start to work on the machine, unplug the power cord. If you cannot unplug it, ask the customer to power off the wall box that supplies power to the machine, and to lock the wall box in the off position.
- If you need to work on a machine that has exposed electrical circuits, observe the following precautions:
  - Ensure that another person, familiar with the power-off controls, is near you. That person must be there to switch off the power, if necessary.
  - Use only one hand when working with powered-on electrical equipment; keep the other hand in your pocket or behind your back.

    CAUTION:
    An electrical shock can occur only when there is a complete circuit. By observing the above rule, you may prevent a current from passing through your body.
  - When using testers, set the controls correctly and use the approved probe leads and accessories for that tester.
  - Stand on suitable rubber mats (obtained locally, if necessary) to insulate you from grounds such as metal floor strips and machine frames.

  Observe the special safety precautions when you work with very high voltages. Instructions for these precautions are in the safety sections of maintenance information. Use extreme care when measuring high voltages.
- Regularly inspect and maintain your electrical hand tools for safe operational condition.
- Do not use worn or broken tools and testers.
- Never assume that power has been disconnected from a circuit. First, check that it has been powered off.
- Always look carefully for possible hazards in your work area. Examples of these hazards are moist floors, nongrounded power extension cables, power surges, and missing safety grounds.
- Do not touch live electrical circuits with the reflective surface of a plastic dental mirror. The surface is conductive; such touching can cause personal injury and machine damage.
- Do not service the following parts with the power on:
  - Power supply units
  - Fans
  - Units similar to those listed above

  This practice ensures correct grounding of the units.
- If an electrical accident occurs:
  - Use caution; do not become a victim yourself.
  - Switch off power.
  - Send another person to get medical aid.

Safety inspection guide

The purpose of this inspection guide is to assist you in identifying potentially unsafe conditions. As each machine was designed and built, required safety items were installed to protect users and service technicians from injury. This guide addresses only those items. You should use good judgment to identify potential safety hazards due to attachment of non-ThinkPad / non-Lenovo features or options not covered by this inspection guide.

If any unsafe conditions are present, you must determine how serious the apparent hazard could be and whether you can continue without first correcting the problem.

Consider these conditions and the safety hazards they present:

- Electrical hazards, especially primary power (primary voltage on the frame can cause serious or fatal electrical shock)
- Explosive hazards, such as a damaged CRT face or a bulging capacitor
- Mechanical hazards, such as loose or missing hardware

To determine whether there are any potentially unsafe conditions, use the following checklist at the beginning of every service task. Begin the checks with the power off, and the power cord disconnected.

Checklist:

1. Check exterior covers for damage (loose, broken, or sharp edges).
2. Turn off the computer. Disconnect the power cord.
3. Check the power cord for:
   a. A third-wire ground connector in good condition. Use a meter to measure third-wire ground continuity for 0.1 ohm or less between the external ground pin and the frame ground.
   b. The power cord should be the authorized type specified for your computer. Go to: https://support.lenovo.com/partslookup.
   c. Insulation must not be frayed or worn.
4. Check for cracked or bulging batteries.
5. Remove the cover.
6. Check for any obvious non-ThinkPad / non-Lenovo alterations. Use good judgment as to the safety of any non-ThinkPad / non-Lenovo alterations.
7. Check inside the unit for any obvious unsafe conditions, such as metal filings, contamination, water or other liquids, or signs of fire or smoke damage.
8. Check for worn, frayed, or pinched cables.
9. Check that the power-supply cover fasteners (screws or rivets) have not been removed or tampered with.

Handling devices that are sensitive to electrostatic discharge

Any computer part containing transistors or integrated circuits (ICs) should be considered sensitive to electrostatic discharge (ESD). ESD damage can occur when there is a difference in charge between objects. Protect against ESD damage by equalizing the charge so that the machine, the part, the work mat, and the person handling the part are all at the same charge.

Notes:

1. Use product-specific ESD procedures when they exceed the requirements noted here.

2. Ensure that the ESD protective devices you use have been certified (ISO 9000) as fully effective.

When handling ESD-sensitive parts:

- Keep the parts in protective packages until they are inserted into the product.
- Avoid contact with other people.
- Wear a grounded wrist strap against your skin to eliminate static on your body.
- Prevent the part from touching your clothing. Most clothing is insulative and retains a charge even when you are wearing a wrist strap.
- Use a grounded work mat to provide a static-free work surface. The mat is especially useful when handling ESD-sensitive devices.
- Select a grounding system, such as those listed below, to provide protection that meets the specific service requirement.

  Note: The use of a grounding system to guard against ESD damage is desirable but not necessary.

  – Attach the ESD ground clip to any frame ground, ground braid, or green-wire ground.
  – When working on a double-insulated or battery-operated system, use an ESD common ground or reference point. You can use coax or connector-outside shells on these systems.
  – Use the round ground prong of the ac plug on ac-operated computers.

Grounding requirements

Electrical grounding of the computer is required for operator safety and correct system function. Proper grounding of the electrical outlet can be verified by a certified electrician.

Safety notices (multilingual translations)

The safety notices in this section are provided in the following languages:
- English
- Arabic
- Brazilian Portuguese
- French
- German
- Hebrew
- Japanese
- Korean
- Spanish
- Traditional Chinese

Note:

DANGER

Before the computer is powered on after FRU replacement, make sure that all screws, springs, and other small parts are in place and are not left loose inside the computer. Verify this by shaking the computer and listening for rattling sounds. Metallic parts or metal flakes can cause electrical short circuits.

DANGER

Some standby batteries contain a small amount of nickel and cadmium. Do not disassemble a standby battery, recharge it, throw it into fire or water, or short-circuit it. Dispose of the battery as required by local ordinances or regulations. Use only the battery in the appropriate parts listing. Use of an incorrect battery can result in ignition or explosion of the battery.

DANGER

The battery pack contains small amounts of nickel. Do not disassemble it, throw it into fire or water, or short-circuit it. Dispose of the battery pack as required by local ordinances or regulations. Use only the battery in the appropriate parts listing when replacing the battery pack. Use of an incorrect battery can result in ignition or explosion of the battery.

DANGER

The lithium battery can cause a fire, an explosion, or a severe burn. Do not recharge it, remove its polarized connector, disassemble it, heat it above 100°C (212°F), incinerate it, or expose its cell contents to water. Dispose of the battery as required by local ordinances or regulations. Use only the battery in the appropriate parts listing. Use of an incorrect battery can result in ignition or explosion of the battery.

DANGER

If the LCD breaks and the fluid from inside the LCD gets into your eyes or on your hands, immediately wash the affected areas with water for at least 15 minutes. Seek medical care if any symptoms from the fluid are present after washing.

DANGER

To avoid shock, do not remove the plastic cover that protects the lower part of the inverter card.

DANGER

Though the main batteries have low voltage, a short-circuited or grounded battery can produce enough current to burn personnel or combustible materials.

DANGER

Unless hot swap is allowed for the FRU being replaced, do as follows before removing it: power off the computer, unplug all power cords from electrical outlets, remove the battery pack, and disconnect any interconnecting cables.

خطر

قبل اعادة تشغيل الحاسب بعد الانتهاء من استبدال FRU، تأكد من أنه قد تم اعادة كل من المسامير و السوست وكل الأجزاء الصغيرة الأخرى في أماكنهم ولم يتم فقدهم داخل الحاسب. ويمكن التحقق من ذلك عن طريق هز الحاسب والاستماع لأي صوت صاخب يصدر منه. قد تؤدي الأجزاء أو الرقائق المعدنية الى حدوث دائرة قصر.

خطر

تحتوي بعض البطاريات الاحتياطية على كمية صغيرة من مادتي النيكل والكادميوم. لا تقم بفك أو اعادة شحن البطارية الاحتياطية ولا تقم أيضا بالقاءها في النار أو الماء ولا تتسبب في احداث دائرة قصر بها. قم بالتخلص من البطارية كما هو موضح في القوانين المحلية. استخدم نوع البطارية المحدد والذي يوصى باستخدامه. حيث أنه قد يؤدي استخدام نوع بطارية غير صحيح الى اشتعالها أو انفجارها.

خطر

تحتوي حزمة البطارية على كمية صغيرة من مادة النيكل. لا تقم بفكها أو القاءها في النار أو الماء ولا تتسبب في احداث دائرة قصر بها. تخلص من حزمة البطارية وفقا لما هو موضح في القوانين المحلية. قم، عند استبدال حزمة البطارية، باستخدام الأنواع المحددة فقط والتي يوصى باستخدامها. حيث أنه قد يؤدي استخدام نوع بطارية غير صحيح الى اشتعالها أو انفجارها.

خطر

قد تتسبب بطارية الليثيوم في حدوث حريق أو انفجار أو حدوث حروق شديدة. لا تقم باعادة شحن البطارية أو ازالة موصل الاستقطاب الخاص بها ولا تحاول أيضا فكها أو تسخينها لأكثر من ١٠٠ درجة مئوية (٢١٢ فهرنهايت) أو حرقها أو تعريض محتويات الخانة الخاصة بها للماء. قم بالتخلص من البطارية وفقا لما هو موضح في القوانين المحلية. استخدم نوع البطارية المحدد والذي يوصى باستخدامه. حيث أنه قد يؤدي استخدام نوع بطارية غير صحيح الى اشتعالها أو انفجارها.

خطر

اذا ما انكسرت شاشة LCD ولامس السائل الداخلي عينيك أو يديك، قم في الحال بغسلهما بالماء لمدة لا تقل عن ١٥ دقيقة. اذا ما وجدت أي أعراض بعد الغسل اطلب عندئذ المساعدة الطبية.

خطر

لتجنب التعرض لأي صدمات، لا تقم بازالة الغطاء البلاستيكي الذي يحمي الجزء الأسفل من بطاقة العاكس.

خطر

على الرغم من أن البطاريات الرئيسية يكون لها جهد منخفض، الا أنه قد تقوم البطاريات التي حدث قصور بها أو التي تم توصيلها أرضيا باصدار تيار يكفي لحدوث حروق للأفراد أو تعرض المواد القابلة للاشتعال للحريق.

خطر

ما لم يتم السماح بالتبديل الفوري لأي FRU الجاري استبداله بدون ضرورة اغلاق النظام، قم بتنفيذ ما يلي قبل ازالته. قم بايقاف تشغيل الحاسب ونزع كل أسلاك الطاقة من المخارج الكهربائية وقم أيضا بازالة حزمة البطارية ثم قم بفصل أي كابلات متصلة.

PERIGO

Antes de ligar o computador após a substituição da FRU, certifique-se de que todos os parafusos, molas e outras peças pequenas estejam no lugar e não estejam soltos dentro do computador. Verifique isso sacudindo o computador e procurando ouvir sons de peças soltas. Peças metálicas ou lascas de metal podem causar curto-circuito.

PERIGO

Algumas baterias reserva contêm uma pequena quantidade de níquel e cádmio. Não desmonte uma bateria reserva, recarregue-a, jogue-a no fogo ou na água, ou deixe-a entrar em curto-circuito. Descarte a bateria conforme requerido pelas leis ou regulamentos locais. Use somente a bateria nas partes listadas apropriadas. O uso de uma bateria incorreta pode resultar em combustão ou explosão da bateria.

PERIGO

O pacote da bateria contém uma pequena quantidade de níquel. Não o desmonte, jogue-o no fogo ou na água, ou deixe-o entrar em curto-circuito. Descarte o pacote da bateria conforme requerido pelas leis ou regulamentos locais. Use somente a bateria nas partes listadas apropriadas ao substituir o pacote da bateria. O uso de uma bateria incorreta pode resultar em combustão ou explosão da bateria.

PERIGO

A bateria de lítio pode causar incêndio, explosão ou graves queimaduras. Não a recarregue, remova seu conector polarizado, desmonte-a, aqueça-a acima de 100°C (212°F), incinere-a, ou exponha o conteúdo de sua célula à água. Descarte a bateria conforme requerido pelas leis ou regulamentos locais. Use somente a bateria nas partes listadas apropriadas. O uso de uma bateria incorreta pode resultar em combustão ou explosão da bateria.

PERIGO

Se o LCD quebrar e o fluido de dentro dele entrar em contato com seus olhos ou com suas mãos, lave as áreas afetadas imediatamente com água durante pelo menos 15 minutos. Procure cuidados médicos se algum sintoma causado pelo fluido surgir após a lavagem.

PERIGO

Para evitar choque elétrico, não remova a capa plástica que protege a parte inferior da placa inversora.

PERIGO

Embora as principais baterias possuam baixa voltagem, uma bateria em curto-circuito ou aterrada pode produzir corrente o bastante para queimar materiais de pessoal ou inflamáveis.

PERIGO

A menos que uma hot swap seja permitida para a FRU que está sendo substituída, faça o seguinte antes de removê-la: desligue o computador, desconecte todos os cabos de energia das tomadas, remova o pacote de baterias e desconecte quaisquer cabos de interconexão.

DANGER

Avant de remettre l'ordinateur sous tension après remplacement d'une unité en clientèle, vérifiez que tous les ressorts, vis et autres pièces sont bien en place et bien fixées. Pour ce faire, secouez l'unité et assurez-vous qu'aucun bruit suspect ne se produit. Des pièces métalliques ou des copeaux de métal pourraient causer un court-circuit.

DANGER

Certaines batteries de secours contiennent du nickel et du cadmium. Ne les démontez pas, ne les rechargez pas, ne les exposez ni au feu ni à l'eau. Ne les mettez pas en court-circuit. Pour les mettre au rebut, conformez-vous à la réglementation en vigueur. Lorsque vous remplacez la pile de sauvegarde ou celle de l'horloge temps réel, veillez à n'utiliser que les modèles cités dans la liste de pièces détachées adéquate. Une batterie ou une pile inappropriée risque de prendre feu ou d'exploser.

DANGER

La batterie contient du nickel. Ne la démontez pas, ne l'exposez ni au feu ni à l'eau. Ne la mettez pas en court-circuit. Pour la mettre au rebut, conformez-vous à la réglementation en vigueur. Lorsque vous remplacez la batterie, veillez à n'utiliser que les modèles cités dans la liste de pièces détachées adéquate. En effet, une batterie inappropriée risque de prendre feu ou d'exploser.

DANGER

La pile de sauvegarde contient du lithium. Elle présente des risques d'incendie, d'explosion ou de brûlures graves. Ne la rechargez pas, ne retirez pas son connecteur polarisé et ne la démontez pas. Ne l'exposez pas à une temperature supérieure à 100°C, ne la faites pas brûler et n'en exposez pas le contenu à l'eau. Mettez la pile au rebut conformément à la réglementation en vigueur. Une pile inappropriée risque de prendre feu ou d'exploser.

DANGER

Si le panneau d'affichage à cristaux liquides se brise et que vous recevez dans les yeux ou sur les mains une partie du fluide, rincez-les abondamment pendant au moins quinze minutes. Consultez un médecin si des symptômes persistent après le lavage.

DANGER

Afin d'éviter tout risque de choc électrique, ne retirez pas le cache en plastique protégeant la partie inférieure de la carte d'alimentation.

DANGER

Bien que le voltage des batteries principales soit peu élevé, le court-circuit ou la mise à la masse d'une batterie peut produire suffisamment de courant pour brûler des matériaux combustibles ou causer des brûlures corporelles graves.

DANGER

Si le remplacement à chaud n'est pas autorisé pour l'unité remplaçable sur site que vous remplacez, procédez comme suit avant de retirer l'unité : mettez l'ordinateur hors tension, débranchez tous les cordons d'alimentation des prises de courant, retirez le bloc de batterie et déconnectez tous les câbles d'interconnexion.

VORSICHT

Bevor nach einem FRU-Austausch der Computer wieder angeschlossen wird, muß sichergestellt werden, daß keine Schrauben, Federn oder andere Kleinteile fehlen oder im Gehäuse vergessen wurden. Der Computer muß geschüttelt und auf Klappergeräusche geprüft werden. Metallteile oder-splitter können Kurzschlüsse erzeugen.

VORSICHT

Die Bereitschaftsbatterie, die sich unter dem Diskettenlaufwerk befindet, kann geringe Mengen Nickel und Cadmium enthalten. Sie darf nur durch die Verkaufsstelle oder den IBM Kundendienst ausgetauscht werden. Sie darf nicht zerlegt, wiederaufgeladen, kurzgeschlossen, oder Feuer oder Wasser ausgesetzt werden. Die Batterie kann schwere Verbrennungen oder Verätzungen verursachen. Bei der Entsorgung die örtlichen Bestimmungen für Sondermüll beachten. Beim Ersetzen der Bereitschafts-oder Systembatterie nur Batterien des Typs verwenden, der in der Ersatzteilliste aufgeführt ist. Der Einsatz falscher Batterien kann zu Entzündung oder Explosion führen.

VORSICHT

Akkus enthalten geringe Mengen von Nickel. Sie dürfen nicht zerlegt, wiederaufgeladen, kurzgeschlossen, oder Feuer oder Wasser ausgesetzt werden. Bei der Entsorgung die örtlichen Bestimmungen für Sondermüll beachten. Beim Ersetzen der Batterie nur Batterien des Typs verwenden, der in der Ersatzteilliste aufgeführt ist. Der Einsatz falscher Batterien kann zu Entzündung oder Explosion führen.

VORSICHT

Die Systembatterie ist eine Lithiumbatterie. Sie kann sich entzünden, explodieren oder schwere Verbrennungen hervorrufen. Batterien dieses Typs dürfen nicht aufgeladen, zerlegt, über 100°C erhitzt oder verbrannt werden. Auch darf ihr Inhalt nicht mit Wasser in Verbindung gebracht oder der zur richtigen Polung angebrachte Verbindungsstecker entfernt werden. Bei der Entsorgung die örtlichen Bestimmungen für Sondermüll beachten. Beim Ersetzen der Batterie nur Batterien des Typs verwenden, der in der Ersatzteilliste aufgeführt ist. Der Einsatz falscher Batterien kann zu Entzündung oder Explosion führen.

VORSICHT

Die Leuchtstoffröhre im LCD-Bildschirm enthält Quecksilber. Bei der Entsorgung die örtlichen Bestimmungen für Sondermüll beachten. Der LCD-Bildschirm besteht aus Glas und kann zerbrechen, wenn er unsachgemäß behandelt wird oder der Computer auf den Boden fällt. Wenn der Bildschirm beschädigt ist und die darin befindliche Flüssigkeit in Kontakt mit Haut und Augen gerät, sollten die betroffenen Stellen mindestens 15 Minuten mit Wasser abgespült und bei Beschwerden anschließend ein Arzt aufgesucht werden.

VORSICHT

Aus Sicherheitsgründen die Kunststoffabdeckung, die den unteren Teil der Spannungswandlerplatine umgibt, nicht entfernen.

VORSICHT

Obwohl Hauptbatterien eine niedrige Spannung haben, können sie doch bei Kurzschluß oder Erdung genug Strom abgeben, um brennbare Materialien zu entzünden oder Verletzungen bei Personen hervorzurufen.

VORSICHT

Wenn ein Austausch der FRU bei laufendem Betrieb nicht erlaubt ist, gehen Sie beim Austausch der FRU wie folgt vor: Schalten Sie den Computer aus, ziehen Sie alle Netzkabel von den Netzsteckdosen ab, entfernen Sie den Akku und ziehen Sie alle miteinander verbundenen Kabel ab.

סכנה

לפני הפעלת המחשב לאחר החלפת FRU יש לוודא שכל הברגים, הקפיצים, והחלקים קטנים אחרים נמצאים במקומם ואינם חופשיים לזוז בתוך המחשב. כדי לוודא זאת, יש לטלטל את המחשב ולהקשיב לגילוי קולות שקשוק. חלקי או שבבי מתכת עלולים לגרום לקצרים חשמליים.

סכנה

סוללות המתנה מסוימות מכילות כמות קטנה של ניקל וקדמיום. אין לפרק סוללת המתנה, לטעון אותה מחדש, להשליך אותה לאש או למים או לקצר אותה. יש לסלק את הסוללה כנדרש על ידי התקנות והחוקים המקומיים. יש להשתמש רק בסוללה המופיעה ברשימת החלקים המתאימה. שימוש בסוללה לא מתאימה עלול לגרום להצתה או התפוצצות של הסוללה.

סכנה

מארז הסוללה מכיל כמות קטנה של ניקל וקדמיום. אין לפרק את מארז הסוללה, להשליך אותו לאש או למים או לקצר אותו. יש לסלק את מארז הסוללה הסוללה כנדרש על ידי התקנות והחוקים המקומיים. יש להשתמש רק בסוללה המופיעה ברשימת החלקים המתאימה בזמן החלפת מארז הסוללה. שימוש בסוללה לא מתאימה עלול לגרום להצתה או התפוצצות של הסוללה.

סכנה

סוללת הליתיום עלולה לגרום לשריפה, להתפוצצות או לכוויות קשות. אין לטעון אותה מחדש, לשלק את המחבר המקוטב שלה, לפרק אותה או לחמם אותה לטמפרטורה העולה על 100 מעלות צלזיוס. אין לשרוף את הסוללה ואין לחשוף את תוכן הסוללה למים. יש לשלק את הסוללה כנדרש בתקנות ובחוקים המקומיים. יש להשתמש רק בסוללה המופיעה ברשימת החלקים המתאימים. שימוש בסוללה אחרת עלול לגרום לסכנת שריפה או התפוצצות.

סכנה

אם מסך הנגביש הנוזלי (LCD) נשבר והנוזל מתוך המסך בא במגע עם עיניכם או ידיכם, שטפו את האזורים הנגועים מיד במים במשך 15 דקות לפחות. פנו לקבלת עזרה רפואית אם תסמינים הנובעים מהמגע עם הנוזל נמשכים לאחר השטיפה.

סכנה

כדי למנוע התחשמלות, אין להסיר את מכסה הפלסטיק המגן על חלקו התחתון של הכרטיס החפוך.

סכנה

אף שהסוללות הראשיות הן בעלות מתח נמוך, סוללה מקוצרת או מוארקת עלולה להפיק זרם משמעותי לגרימת כוויות או להצתת חומרים דליקים.

סכנה

אלא אם כן מותרת ‘החלפה חמה’ של ה-FRU המוחלף, פעלו כדלהלן לפני הסרתו:
כבו את המחשב, נתקו את כל כבלי החשמל מהשקעים, הוציאו את מארז הסוללות ונתקו את כל הכבלים המחוברים.

危険

FRU の交換後、コンピューターの電源を入れる前に、ねじ、バネ、その他の小さな部品がすべて正しい位置にあり、コンピューターの内部でそれらが緩んでいないことを確認してください。これを確認するには、コンピューターを振って、カチャカチャと音がしないか確認します。金属部品や金属破片はショートの原因になることがあります。

危険

予備バッテリーの中には少量のニッケルとカドミウムが含まれているものがあります。したがって、予備バッテリーの分解、再充電、火または水の中への投棄、またはショートさせることは決して行わないでください。バッテリーを廃棄する場合は地方自治体の条例に従ってください。適切なパーツ・リストにあるバッテリーだけを使用してください。誤ったバッテリーを使用すると、バッテリーが発火したり、爆発したりすることがあります。

危険

バッテリー・パックには少量のニッケルが含まれています。バッテリー・パックを分解したり、火または水の中に投げ込んだり、ショートさせないでください。バッテリー・パックの廃棄にあたっては、地方自治体の条例または規則に従ってください。バッテリー・パックを交換するときは、適切なパーツ・リストにあるバッテリーだけを使用してください。誤ったバッテリーを使用すると、バッテリーが発火したり、爆発したりすることがあります。

危険

リチウム・バッテリーは、火災、爆発、または重症のやけどを引き起こすことがあります。バックアップ・バッテリーの充電、その極性コネクターの取り外し、バッテリー本体の分解、
100 ℃ (212 ˚F) 以上への加熱、焼却、電池の中身を水に浸すことはしないでください。バッテリーを廃棄する場合は地方自治体の条例に従ってください。適切なパーツ・リストにあるバッテリーだけを使用してください。誤ったバッテリーを使用すると、バッテリーが発火したり、爆発したりすることがあります。

危険

LCD が破損し、 LCD の中の液体が目に入ったり、手に触れたりした場合は、液体が触れた部分を少なくとも 15 分間洗い流してください。洗い流した後に、液体によって何らかの症状が現れた場合は、医師の治療を受けてください。

危険

感電を防ぐため、インバーター・カードの下部を保護しているプラスチック・カバーを外さないでください。

危険

メイン・バッテリーの電圧は低くても、ショートしたり、接地したバッテリーが、作業者にやけどを負わせたり、可燃物を燃やすだけの電流を発生させる場合があります。

危険

交換しようとしている FRU がホット・スワップに対応していない場合、それを取り外す前に、コンピューターの電源をオフにし、すべての電源コードをコンセントから抜き、バッテリー・パックを取り外して、相互接続しているケーブルをすべて切り離してください。

위험

FRU를 교체하고 나서 컴퓨터 전원을 켜기 전에 모든 나사, 스프링 및 기타 작은 부품들이 올바른 위치에 있는지, 컴퓨터 내부에 단단하게 연결되어 있는지 확인하십시오. 컴퓨터를 흔들어 달깍거리는 소리가 나지 않는지 확인하십시오. 금속 부품 또는 금속 조각은 누전을 일으킬 수 있습니다.

위험

일부 보조 배터리에는 소량의 니켈 및 카트륨이 포함되어 있습니다. 보조 배터리를 분해하거나, 다시 충전하거나, 불 또는 물에 던지거나, 단락시키지 마십시오. 배터리 팩을 폐기할 때에는 해당 지역의 법률 규정을 따르십시오. 배터리 팩을 교체할 때에는 올바른 배터리만 사용하십시오. 올바르지 않은 배터리를 사용하면 배터리가 발화되거나 폭발할 수 있습니다.

위험

배터리 팩에는 소량의 니켈이 포함되어 있습니다. 배터리 팩을 분해하거나, 불 또는 물에 던지거나, 단락시키지 마십시오. 배터리 팩을 폐기할 때에는 해당 지역의 법률 규정을 따르십시오. 배터리 팩을 교체할 때에는 올바른 배터리만 사용하십시오. 올바르지 않은 배터리를 사용하면 배터리가 발화되거나 폭발할 수 있습니다.

위험

리튬 배터리는 화재, 폭발 또는 심각한 화상을 일으킬 수 있습니다. 리튬 배터리를 다시 충전하거나, 극성 커넥터를 제거하거나, 분해하거나, 100C(212F) 이상으로 가열하거나, 소각하거나, 전지 내용물을 물에 노출시키지 마십시오. 배터리를 폐기할 때에는 해당 지역을 법률 규정을 따르십시오. 올바른 배터리만 사용하십시오. 올바르지 않은 배터리를 사용하면 배터리가 발화되거나 폭발할 수 있습니다.

위험

LCD가 파손되어 LCD 내부의 액체가 눈에 들어가거나 손에 묻으면 즉시 깨끗한 물로 15분 이상 닦아 내십시오. 씻은 후에 조금이라도 이상을 느끼면 즉시 병원에 가서 의사의 진찰을 받아야 합니다.

위험

전기적 위험을 방지하려면 인버터 카드의 아래 부분을 보호하는 플라스틱 덮개를 제거하지 마십시오.

위험

기본 배터리의 전압은 낮지만, 단락되거나 접지된 배터리는 화상을 입히기에 충분한 전류와 가연성 물질을 발생시킬 수 있습니다.

위험

FRU 교체 시 Hot Swap이 지원되지 않는 경우, FRU를 제거하기 전에 컴퓨터의 전원을 끄고, 전기 콘센트에서 전원 코드를 분리하고, 배터리를 제거한 후, 연결된 모든 케이블을 분리하십시오.

PELIGRO

Antes de encender el sistema despues de sustituir una FRU, compruebe que todos los tornillos, muelles y demás piezas pequeñas se encuentran en su sitio y no se encuentran sueltas dentro del sistema. Compruébelo agitando el sistema y escuchando los posibles ruidos que provocarían. Las piezas metálicas pueden causar cortocircuitos eléctricos.

PELIGRO

Algunas baterías de reserva contienen una pequeña cantidad de níquel y cadmio. No las desmonte, ni recargue, ni las eche al fuego o al agua ni las cortocircuite. Deséchelas tal como dispone la normativa local. Utilice sólo baterías que se encuentren en la lista de piezas. La utilización de una batería no apropiada puede provocar la ignición o explosión de la misma.

PELIGRO

Las baterías contienen pequeñas cantidades de níquel. No las desmonte, ni recargue, ni las eche al fuego o al agua ni las cortocircuite. Deséchelas tal como dispone la normativa local. Utilice sólo baterías que se encuentren en la lista de piezas al sustituir la batería. La utilización de una batería no apropiada puede provocar la ignición o explosión de la misma.

PELIGRO

La batería de repuesto es una batería de litio y puede provocar incendios, explosiones o quemaduras graves. No la recargue, ni quite el conector polarizado, ni la desmonte, ni caliente por encima de los 100°C (212°F), ni la incinere ni exponga el contenido de sus celdas al agua. Deséchela tal como dispone la normativa local.

PELIGRO

Si la LCD se rompe y el fluido de su interior entra en contacto con sus ojos o sus manos, lave inmediatamente las áreas afectadas con agua durante 15 minutos como mínimo. Obtenga atención medica si se presenta algún síntoma del fluido despues de lavarse.

PELIGRO

Para evitar descargas, no quite la cubierta de plástico que rodea la parte baja de la tarjeta invertida.

PELIGRO

Aunque las baterías principales tienen un voltaje bajo, una batería cortocircuitada o con contacto a tierra puede producir la corriente suficiente como para quemar material combustible o provocar quemaduras en el personal.

PELIGRO

Salvo que se permita el intercambio en caliente para la unidad sustituible localmente, realice lo siguiente antes de extraerla: apague el sistema, desconecte todos los cables de alimentación de las tomas de alimentación eléctrica, extraiga la batería y desconecte los cables de interconexión.

危險

完成 FRU 更換之後，在開啟電腦的電源之前，請確定所有螺絲、彈簧及其他小零件都已歸位，沒有遺留在電腦內部。
若要確認這一點，請搖晃電腦，聽聽看是否有卡嗒的聲響。
金屬零件或儀錶的火花會造成電線短路。

危險

部分備用電池含有微量的鎳和鎘。請勿拆開備用電池、再充電、丟入火或水中，或使其形成短路。請按照當地法令或規定來棄置電池。

僅限使用零件清單中的電池。使用不適當的電池會導致電池起火或爆炸。

危險

電池套件含有微量的鎳。請勿拆開電池套件、丟入火或水中，或使其形成短路。請按照當地法令或規定來棄置電池套件。

更換電池套件時，僅限使用零件清單中的電池。使用不適當的電池會導致電池起火或爆炸。

危險

鋰電池會導致起火、爆炸或嚴重燒傷。請勿再充電、拔除其電極接頭、拆開、加熱超過 100°C (212°F) 、焚燒，或讓電池組成物浸到水。請按照當地法令或規定來棄置電池。
僅限使用零件清單中的電池。使用不適當的電池會導致電池起火或爆炸。

危險

如果 LCD 破裂導致 LCD 流出的液體沾到您的眼睛或手，請立即以清水沖洗沾染部位至少 15 分鐘。如果在清洗後出現該液體所造成的任何症狀，請就醫治療。

危險

為避免電擊，請勿拆下轉換卡下面的塑膠護蓋。

危險

雖然主電池的電壓很低，但短路或接地電池所產生的電流，仍足以使人燒傷或使可燃物質起火。

危險

除非 FRU 允許以熱抽換來替換，否則請依下列方式將其移除：將電腦關機，拔除插座上所有電源線，移除電池包，並拔開任何交互連接的線材。

Chapter 2. General checkout

Before you go to the checkout instructions, ensure that you read the following important notes.

Important notes:

- **Only certified trained personnel should service the computer.**
- **Before replacing any FRU, read the entire page on removing and replacing FRUs.**
- **When you replace FRUs, it is recommended to use new nylon-coated screws.**
- **Be extremely careful during such write operations as copying, saving, or formatting.** Drives in the computer that you are servicing sequence might have been altered. If you select an incorrect drive, data or programs might be overwritten.
- **Replace a FRU only with another FRU of the correct model.** When you replace a FRU, make sure that the model of the machine and the FRU part number are correct by visiting https://support.lenovo.com/partslookup.
- **A FRU should not be replaced because of a single, unreproducible failure.** Single failures can occur for a variety of reasons that have nothing to do with a hardware defect, such as cosmic radiation, electrostatic discharge, or software errors. Consider replacing a FRU only when a problem recurs. If you suspect that a FRU is defective, clear the error log and run the test again. If the error does not recur, do not replace the FRU.
- **Be careful not to replace a nondefective FRU.**

What to do first

When you return a FRU, you must include the following information in the parts exchange form or parts return form that you attach to it:

1. Name and phone number of service technician
2. Date of service
3. Date on which the machine failed
4. Date of purchase
5. Failure symptoms, error codes appearing on the display, and beep symptoms
6. Procedure index and page number in which the failing FRU was detected
7. Failing FRU name and part number
8. Machine type, model number, and serial number
9. Customer's name and address

Note: During the warranty period, the customer may be responsible for repair costs if the computer damage was caused by misuse, accident, modification, unsuitable physical or operating environment, or improper maintenance by the customer. Following is a list of some common items that are not covered under warranty and some symptoms that might indicate that the system was subjected to stress beyond normal use.

Before checking problems with the computer, determine whether the damage is covered under the warranty by referring to the following list:

The following are not covered under warranty:

- LCD panel cracked from the application of excessive force or from being dropped
- Scratched (cosmetic) parts
- Distortion, deformation, or discoloration of the cosmetic parts
- Plastic parts, latches, pins, or connectors that have been cracked or broken by excessive force

© Copyright Lenovo 2025, 2026

- Damage caused by liquid spilled into the system
- Damage caused by the improper insertion of a personal-computer card (PC card) or the installation of an incompatible card
- Improper disc insertion or use of an external optical drive
- Fuses blown by attachment of a non-supported device
- Forgotten computer password (making the computer unusable)
- Sticky keys caused by spilling a liquid onto the keyboard
- Use of an incorrect ac power adapter on laptop products

The following symptoms might indicate damage caused by non-warranted activities:
- Missing parts might be a symptom of unauthorized service or modification.
- Check for obvious damage to a hard disk drive. If the spindle of a hard disk drive becomes noisy, the hard disk drive might have been dropped or subject to excessive force.

Checking the ac power adapter

If the computer fails only when the ac power adapter is used:

- If the power problem occurs only when the docking station or the port replicator is used, replace the docking station or the port replicator.
- If the system status indicator does not blink three times when an ac power source is connected, check the power cord of the ac power adapter for correct continuity and installation.
- If the computer does not charge during operation, go to “Checking the battery and operational charging” on page 19.

Note: Noise from the ac power adapter does not always indicate a defect.

Step 1. Connect the computer to a power outlet and turn on the computer.

Step 2. Start the Vantage app, and locate the **Power** section. The ac power adapter information is displayed.

Ensure that you use the ac power adapter that is shipped with the computer to provide enough power to the computer. Otherwise a message will be displayed, prompting you that the computer will not be charged or will be charged slowly.

Checking the battery and operational charging

This system supports only batteries specially designed for this specific system and manufactured by Lenovo or an authorized manufacturer. The system does not support unauthorized batteries or batteries designed for other systems. If an unauthorized battery or a battery designed for another systems is installed, the system will not charge.

Attention: Lenovo has no responsibility for the performance or safety of unauthorized batteries, and provides no warranties for failures or damage arising out of their use.

Move your pointer to the battery-status icon in the Windows® notification area to check the battery status. The battery-status icon displays the percentage of battery power remaining and how long you can use your computer before you must charge the battery.

To check the operational charging, do the following:

Step 1. Discharge the battery to 50% or lower.

Step 2. Perform operational charging. Click the battery status icon in the Windows notification area to display detailed battery information. If it indicates that the battery is not charging, replace the battery.

Step 3. Check the battery status again. If the same error still exists, replace the system board.

Chapter 3. Locations

Locating computer controls and connectors

Front view

Item	Description	Item	Description
	Microphone		Infrared camera / Camera
	Webcam privacy shutter		Touch screen
	Power button with / without fingerprint reader		Trackpad

* for selected models

© Copyright Lenovo 2025, 2026

Side view

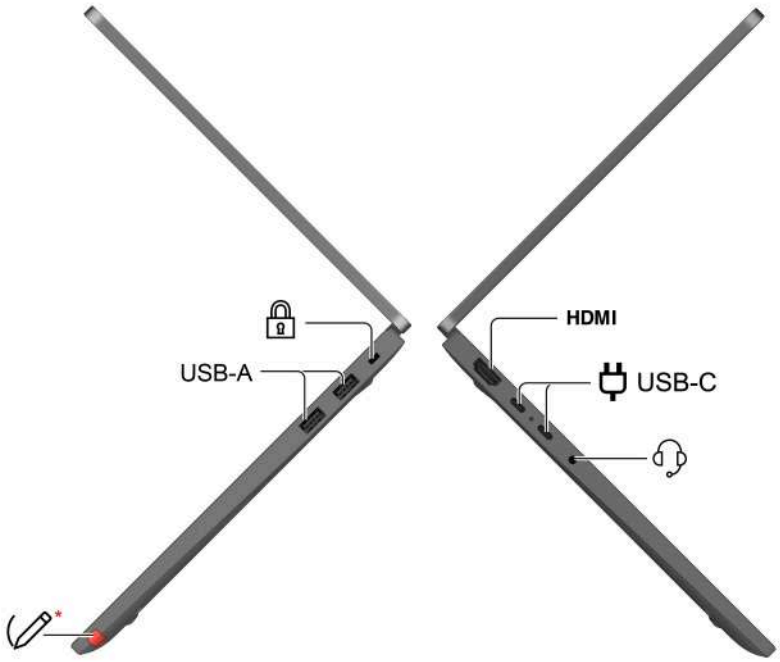

Item	Description	Item	Description
HDMI	HDMI™ connector	USB-C	USB-C® power connector (USB 10Gbps)
	Audio connector		Lenovo Integrated Pen
USB-A	USB-A connector (USB 5Gbps)		Security-lock slot

* for selected models

Bottom view

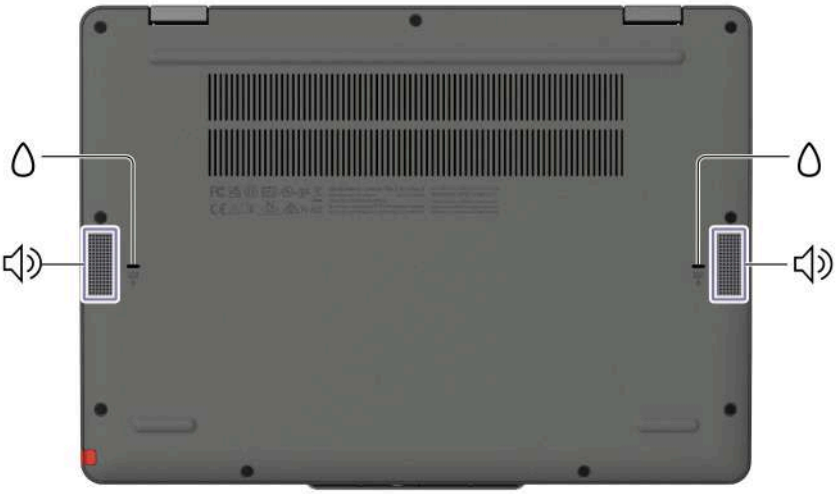

Item	Description	Item	Description
	Keyboard drainage hole		Speaker

Keyboard drainage hole

Drain out liquid from your computer if you accidentally spill liquid on the keyboard.

Locating FRUs and CRUs

This topic introduces the following service parts:

- "Major FRUs and CRUs" on page 26
- "LCD FRUs and CRUs" on page 28
- "Miscellaneous parts" on page 29

Notes:

- Each FRU is available for all types or models, unless otherwise specified.
- **CRU statement for customers:**
  You can resolve some problems with your product with a replacement part you can install yourself, called a "Customer Replaceable Unit" or "CRU." Some CRUs are designated as self-service CRUs and others are designated as optional-service CRUs. *Installation of self-service CRUs is your responsibility. For optional-service CRUs, you can either install the CRU yourself or you can request that a Service Provider install the CRU according to the warranty service for your product.* If you intend on installing the CRU, Lenovo will ship the CRU to you. CRU information and replacement instructions are shipped with your product and are available from Lenovo at any time upon request. You can find a list of CRUs for your product in this *Hardware Maintenance Manual*. An electronic version of this manual can be found at https://support.lenovo.com. Click **Documentation** and then follow the on-screen instructions to find the manual for your product. You might be required to return the defective CRU. When return is required: (1) return instructions, a prepaid shipping label, and a container will be included with the replacement CRU; and (2) you might be charged for the replacement CRU if Lenovo does not receive the defective CRU within thirty (30) days of your receipt of the replacement CRU. See your Lenovo Limited Warranty documentation for full details.
- Your computer contains the following types of CRUs and FRUs:
  - **Self-service CRUs:** Refer to parts that can be replaced easily by customer themselves or by trained service technicians at an additional cost.
  - **Optional-service CRUs:** Refer to parts that can be replaced by customers with a greater skill level. Trained service technicians can also provide service to replace the parts under the type of warranty designated for the customer's machine.
  - **FRUs:** Refer to parts that are more complicated to replace and it is recommended that these parts should be replaced by trained service technicians. If customers elect to replace the FRU by themselves, we recommend that you ensure the correct instructions are carefully followed.

Major FRUs and CRUs

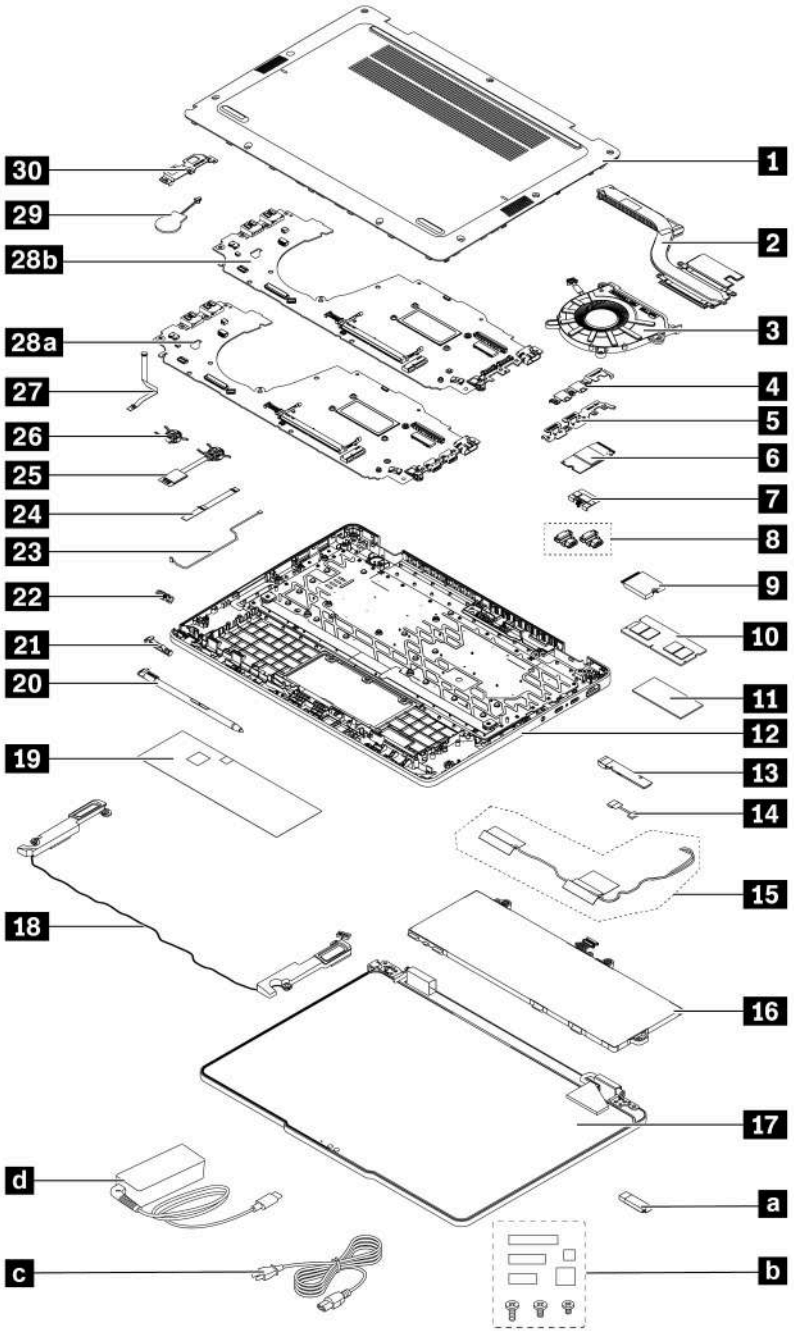

Table 1. Major FRUs and CRUs

No.	FRU description	Self-service CRU	Optional-service CRU
1	Base cover assembly	Yes	No
2	Heat sink	No	No
3	Thermal fan	No	Yes
4	Right I/O bracket*	No	No

Table 1. Major FRUs and CRUs (continued)

No.	FRU description	Self-service CRU	Optional-service CRU
5	Replaceable USB-C module bracket*	No	Yes
6	M.2 2242 solid-state drive	Yes	No
7	M.2 2242 solid-state drive bracket	Yes	No
8	Replaceable USB-C module*	No	Yes
9	Wireless LAN module	No	No
10	Memory module	Yes	No
11	Thermal pad for memory module	No	No
12	Keyboard-and-trackpad assembly	No	No
13	Rear camera-and-microphone module*	No	No
14	Rear camera-and-microphone module cable*	No	No
15	Wireless LAN antenna assembly	No	No
16	Built-in battery	No	Yes
17	LCD unit	No	No
18	Speaker assembly	No	No
19	Trackpad waterproof mylar	No	No
20	Lenovo Integrated Pen*	Yes	No
21	Pen dummy*	Yes	No
22	Lenovo Integrated Pen charge board*	No	No
23	Lenovo Integrated Pen charge board cable*	No	No
24	Fingerprint reader cable*	No	No
25	Power button with fingerprint reader and its bracket*	No	No
26	Power button with bracket*	No	No
27	Trackpad cable	No	No
28a	System board (for models with non-replaceable USB-C module)	No	No
28b	System board (for models with replaceable USB-C module)	No	No
29	Coin-cell battery	No	Yes
30	Left I/O bracket	No	No
a	Lenovo factory recovery USB key*	No	No
b	Miscellaneous parts kits (see “Miscellaneous parts” on page 29)	No	No
c	Power cord	Yes	No
d	ac power adapter	Yes	No

* for selected models

Notes:

- Depending on the computer model, your computer might look different from the illustration above.
- The Lenovo factory recovery USB key a is used to restore the Microsoft Windows operating system. It might not come with the computer, and a user might order it from https://pcsupport.lenovo.com/lenovorecovery, though additional shipping and handling fees might apply.

LCD FRUs and CRUs

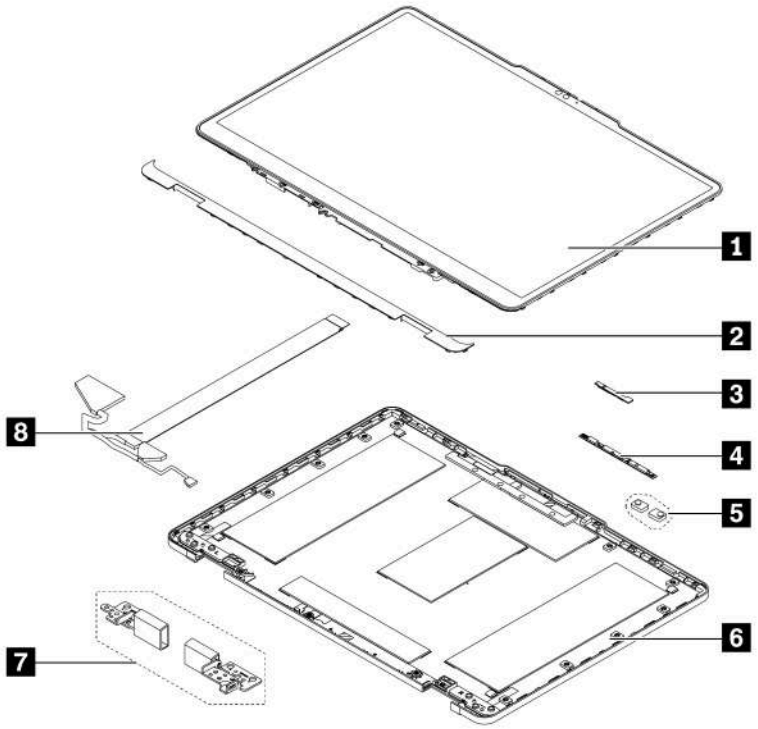

Table 2. LCD FRUs and CRUs

No.	FRU description	Self-service CRU	Optional-service CRU
1	Touch module assembly	No	No
2	LCD strip cover	No	No
3	Gravity sensor board	No	No
4	Camera-and-microphone module*	No	No
5	Microphone rubbers	No	No
6	LCD cover assembly	No	No
7	LCD hinges	No	No
8	LCD and camera cable	No	No

* for selected models

Note: Depending on the computer model, your computer might look different from the illustration above.

Miscellaneous parts

Table 3. Miscellaneous part

FRU descriptions	Self-service CRU	Optional-service CRU
Screw kit • M2.5 x L2.5, silver (6) • M2 x L3, silver (4) • M2 x L4, silver (12) • M1.2 x L1.7, silver (3) • M2 x L3, silver (1) • M2 x L5.5, silver (3) • M2.5 x L7, black (7) • M2 x L5, black (2) • M2.5 x L5, silver (4) • Spec	No	No
Mechanical miscellaneous kit • Thermal pad for memory kit • Trackpad waterproof mylar kit • Microphone rubber kit • Aluminium foil for camera kit	No	No
Label kit: • Label • Spec	No	No

Looking up FRU information

For detailed FRU information, including part numbers, descriptions, and substitution part numbers, go to: https://support.lenovo.com/partslookup

Chapter 4. FRU replacement notices

Read this chapter carefully before replacing any FRU.

Service tool kit

Ensure that the following service tool kit is prepared before you service a notebook computer.

No.	Tool name	Tool type
1	Phillips-head screwdriver	Common tool
2	Conductive tweezers	Common tool
3	Pry tool	Common tool
4	Silicone grease	Consumable tool
5	Polyamide tape	Consumable tool
6	Mylar tape	Consumable tool
7	Eraser	Consumable tool
8	Electrical tape	Consumable tool
9	Double-sided tape	Consumable tool
10	Conductive tape	Consumable tool

Note: The silicone grease can be applied to the surfaces of the microprocessor and heat sink to eliminate air gaps. For parts with silicone grease applied, it is suggested that you apply new grease during the installation.

Screw notices

Loose screws can cause a reliability problem. In your computer, this problem is addressed with special nylon-coated screws that have the following characteristics:

- They maintain tight connections.
- They do not easily come loose, even with shock or vibration.
- They are harder to tighten.

Do the following when you service the computer:

- Keep the screw kit in your tool bag. For the part number of the screw kit, go to: https://support.lenovo.com/partslookup

Tighten screws as follows:

- **Plastic to plastic**

  Turn an additional angle of 90 degrees after the screw head touches the surface of the plastic part.

© Copyright Lenovo 2025, 2026

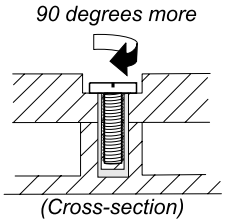

- **Logic card to plastic**

  Turn an additional angle of 180 degrees after the screw head touches the surface of the logic card.

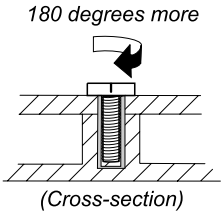

Notes:

- Ensure that you use the correct screw. It is recommended to use new screws for replacements. If you have a torque screwdriver, tighten all screws firmly to the torque specified in the screw information table for each step.
- Ensure torque screwdrivers are calibrated correctly following country specifications.

Chapter 5. Removing or replacing a FRU

This chapter provides instructions on how to remove or replace a FRU.

General guidelines

When removing or replacing a FRU, be sure to observe the following general guidelines:

1. Do not try to service any computer unless you have been trained and certified. An untrained person runs the risk of damaging parts.
2. Before replacing any FRU, review Chapter 4 “FRU replacement notices” on page 30.
3. Begin by removing any FRUs that have to be removed before replacing the failing FRU. Any such FRUs are listed at the beginning of each FRU replacement section. Remove them in the order in which they are listed.
4. Follow the correct sequence in the steps for removing a FRU, as given in the illustrations by the numbers in square callouts.
5. When turning a screw, turn it in the direction as given by the arrow in the illustration.
6. When removing a FRU, move it in the direction as given by the arrow in the illustration.
7. To put the new FRU in place, reverse the removal procedure and follow any notes that pertain to replacement.
8. When replacing a FRU, use the correct screws as shown in the replacement procedures.

DANGER

Before removing any FRU, turn off the computer, unplug all power cords from electrical outlets, disable the built-in battery, and then disconnect any interconnecting cables.

Attention:

- After replacing a FRU, do not turn on the computer until you have made sure that all screws, springs, and other small parts are in place and none are loose inside the computer. Verify this by shaking the computer gently and listening for rattling sounds. Metallic parts or metal flakes can cause electrical short circuits.
- The system board is sensitive to, and can be damaged by ESD. Before touching it, establish personal grounding by touching a ground point with one hand or by using an ESD strap.

Before servicing the computer

Carefully read this topic before servicing the computer.

Disable Fast Startup and the built-in battery

Before replacing any FRU, ensure that you disable Fast Startup first and then disable the built-in battery.

To disable Fast Startup

Step 1. Go to **Control Panel** and view by Large icons or Small icons.

Step 2. Click **Power Options**, and then click **Choose what the power buttons do** on the left pane.

Step 3. Click **Change settings that are currently unavailable** at the top.

Step 4. If prompted by User Account Control (UAC), click **Yes**.

© Copyright Lenovo 2025, 2026

Step 5. Clear the **Turn on fast startup** check box, and then click **Save changes**.

To disable the built-in battery

Step 1. Enter the setup utility.

Step 2. Select **Configuration → Disable Built-in Battery** and press Enter.

Step 3. Select **Yes** in the Setup Confirmation window.

The built-in battery is disabled and the computer turns off automatically.

Wait three to five minutes to let the computer cool.

Notes: If your computer cannot enter the UEFI BIOS menu, you cannot disable the built-in battery. To avoid short circuit when you replace a part, it is recommended to do the following:

- For the built-in battery connected to the system board with cables: Disconnect the battery cables.
- For the built-in battery connected to the system board with combo connectors: Disconnect the connectors by removing the battery. For the removal procedure, refer to the built-in battery replacement instructions in this documentation.

Lenovo Integrated Pen and pen dummy (for selected models)

Before you start, read *Generic Safety and Compliance Notices*.

Depending on models, your computer might come with a Lenovo Integrated Pen or a pen dummy.

For access, do the following:

1. Ensure that your computer is off or in sleep mode. Disconnect the computer from ac power and all connected cables.
2. Close the computer display and turn the computer over.

Tool needed: Pry tool

Step 1. Remove the Lenovo Integrated Pen or pen dummy as shown below.

Note: You might need a pry tool when removing the pen dummy.

Step 2. Install the Lenovo Integrated Pen or pen dummy in reverse order.

Base cover assembly

Before you start, read *Generic Safety and Compliance Notices* .

Notes: Do not remove the base cover assembly in the following situations. Otherwise, there might be a risk of short circuits.

- When your computer has the removable battery installed

- When your computer is connected to ac power

For access, do the following:

1. Disable Fast Startup and the built-in battery. See “Disable Fast Startup and the built-in battery” on page 32.
2. Turn off the computer and disconnect the computer from ac power and all connected cables.
3. Close the computer display and turn over the computer.
4. Remove the Lenovo Integrated Pen or pen dummy. See “Lenovo Integrated Pen and pen dummy (for selected models)” on page 33.

Tool needed:

- Phillips-head screwdriver
- Pry tool

Step 1. Remove the base cover assembly as shown below.

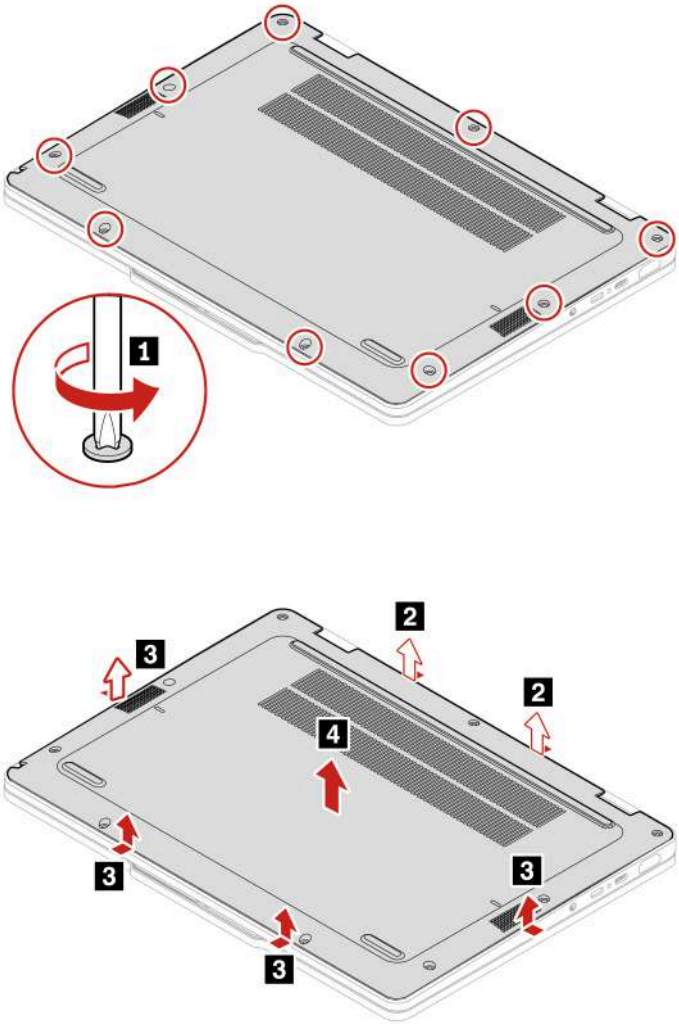

Step 2. Install the base cover assembly as shown below.

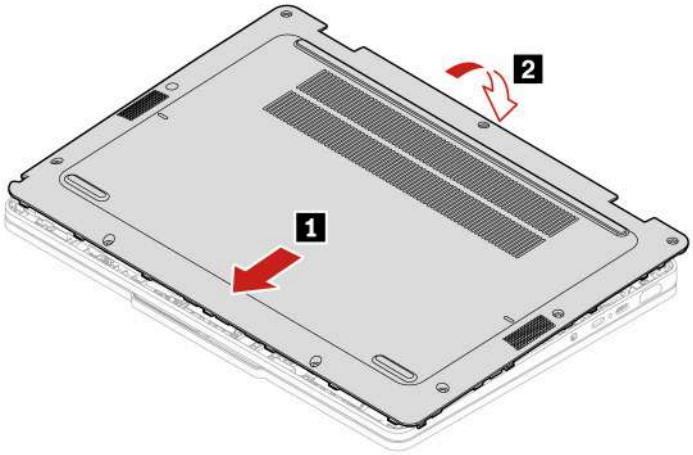

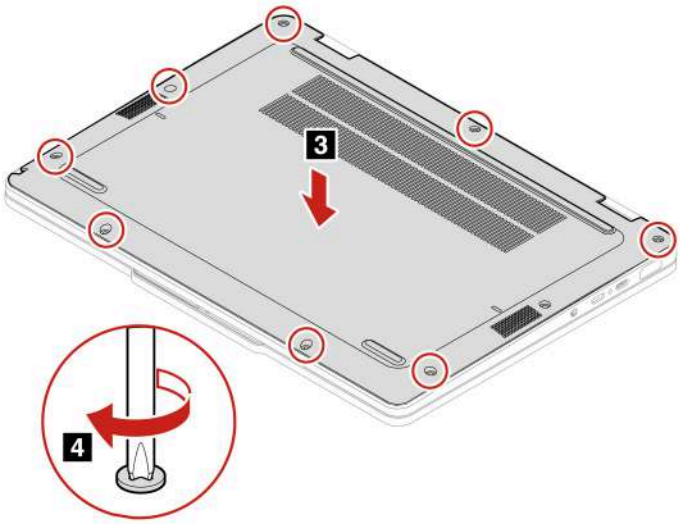

If the computer does not start up after you reinstall the base cover assembly, disconnect the ac power adapter and then reconnect it to the computer.

Applying labels to the base cover assembly

Notes:

- Depending on the country or region of delivery, the labels might be slightly different from the ones in the following illustration.
- The new base cover assembly FRU is shipped with a kit containing labels of several kinds. Apply those labels when you replace the base cover assembly. For the labels that are not shipped with the new base cover assembly, peel them from the old base cover assembly, and adhere them to the new one.

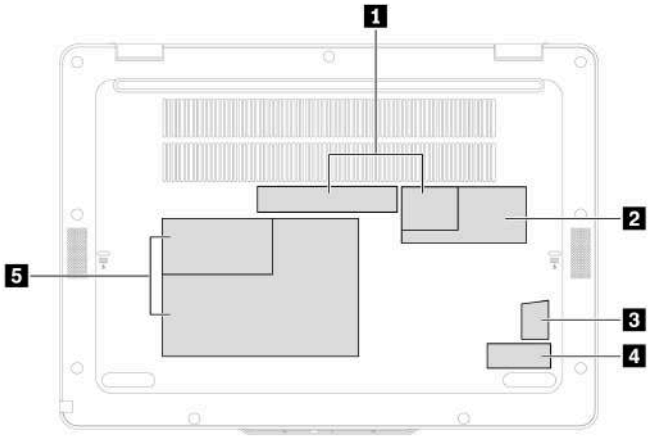

Item	Item
1 GEO label	2 Country label
3 Genuine Microsoft label	4 S/N label
5 Asset tag	

Built-in battery

Before you start, read *Generic Safety and Compliance Notices*.

CAUTION:
Use only the Lenovo-authorized battery specified for the computer. Any other battery could ignite or explode.

Batteries supplied by Lenovo for use with your product have been tested for compatibility and should only be replaced with approved parts. A battery other than the one specified by Lenovo, or a disassembled or modified battery may not be covered by warranty.

Battery abuse or mishandling can cause overheat, liquid leakage, or an explosion. To avoid possible injury:

- **Do not open, disassemble or service any battery unless you are competent to do so and ensure that you carefully follow all instructions provided by Lenovo.**
- **Do not crush or puncture the battery.**
- **Do not short-circuit the battery, or expose it to water or other liquids.**
- **Keep the battery away from children.**
- **Keep the battery away from fire.**
- **Stop using the battery if it is damaged, or if you notice any discharge or the buildup of foreign materials on the battery leads.**
- **Store the rechargeable batteries or products containing the rechargeable batteries at room temperature, charged to approximately 30 to 50% of capacity. We recommend that the batteries be charged about once per year to prevent overdischarge.**
- **Do not put the battery in trash that is disposed of in landfills. When disposing of the battery, comply with local ordinances or regulations.**

- **If the battery is incorrectly replaced, there is danger of an explosion. The battery contains a small amount of harmful substances.**

Lenovo recommends you use a qualified repair technician or ensure that you carefully follow all instructions provided by Lenovo. The Lenovo-authorized repair facilities or technicians recycle Lenovo batteries according to local laws and regulations. Please do not dispose of your battery with your household waste. For recycling information go to https://www.lenovo.com/recycling.

Attention: Lenovo has no responsibility for the performance or safety of unauthorized batteries, and provides no warranties for failures or damage arising out of their use.

The Vantage app provides an automatic battery diagnostic test that determines if the built-in battery is defective. A built-in battery should not be replaced unless this diagnostic test shows that the battery is defective. The only exception to this is if the built-in battery is physically damaged or a customer is reporting a possible safety issue.

If the Vantage app is not installed on the computer, the customer should download and install the program to diagnose the built-in battery, before replacing a non-physically damaged built-in battery. Note that the replacement of a physically damaged built-in battery is not covered by the warranty.

For access, remove this FRU:
- "Lenovo Integrated Pen and pen dummy (for selected models)" on page 33
- "Base cover assembly" on page 33

Tool needed: Phillips-head screwdriver

Step 1. Remove the built-in battery as shown below.

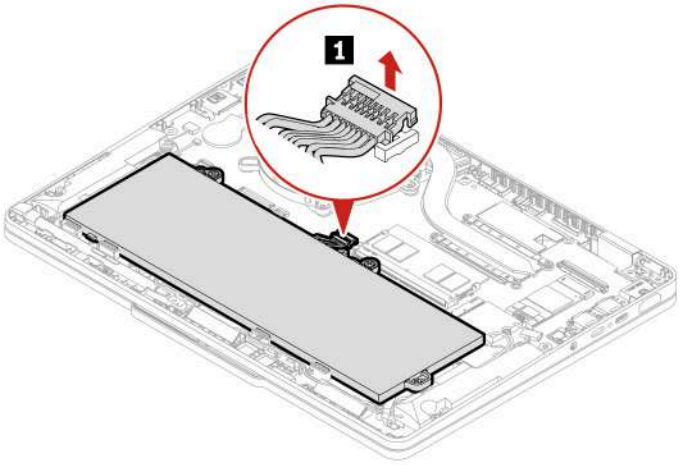

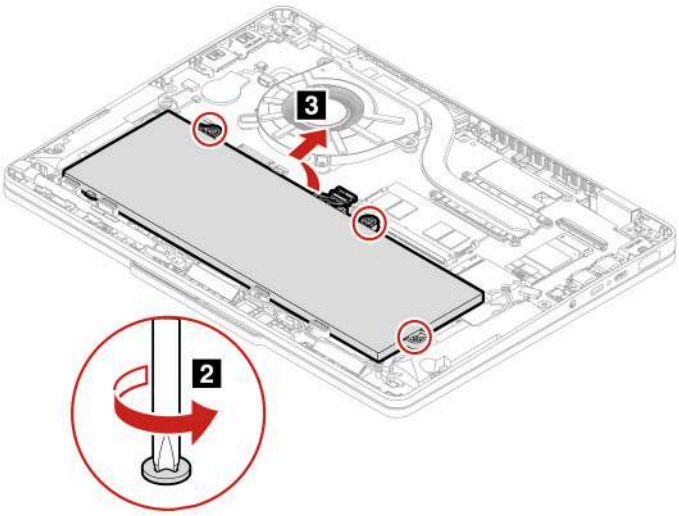

Step 2. Before installing the built-in battery, thoroughly check the battery compartment and ensure that there are no foreign or sharp objects that could cause damage to the battery.

Step 3. Install the built-in battery as shown below.

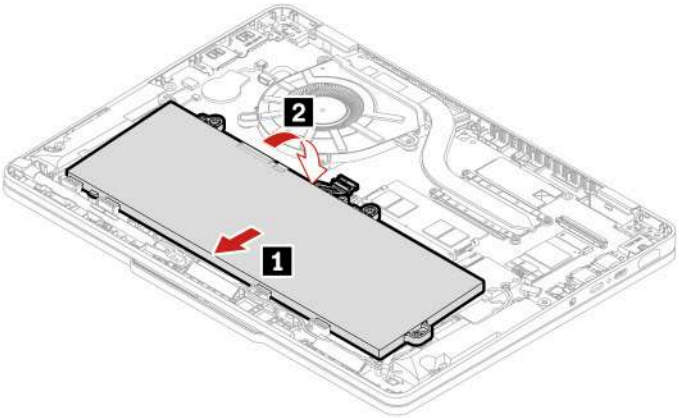

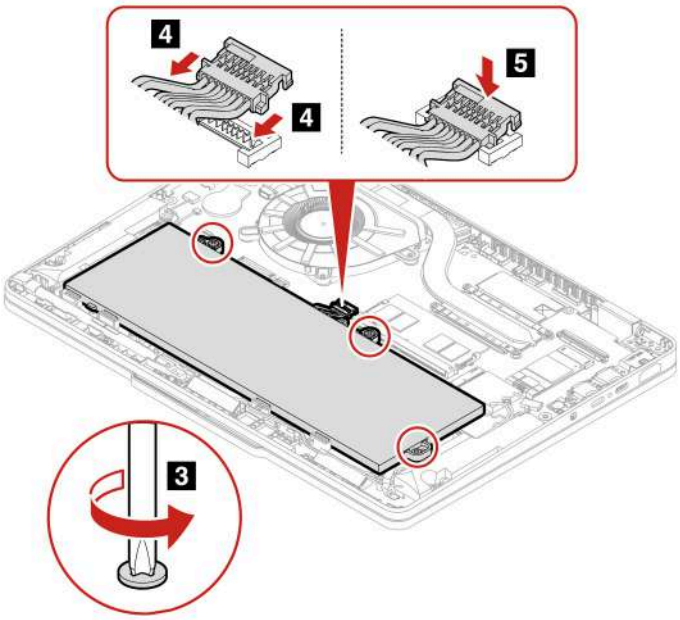

When installing:

- Ensure that the connector is attached firmly.
- Ensure that the base cover assembly is secured in place. Otherwise, the battery connection may fail.

M.2 solid-state drive and M.2 solid-state drive bracket

Before you start, read *Generic Safety and Compliance Notices*.

Attention: The M.2 solid-state drive is sensitive. Inappropriate handling might cause damage and permanent loss of data.

When handling the M.2 solid-state drive, observe the following guidelines:

- Replace the M.2 solid-state drive only for repair. The M.2 solid-state drive is not designed for frequent changes or replacement.
- Before replacing the M.2 solid-state drive, make a backup copy of all the data that you want to keep.
- Do not apply pressure to the M.2 solid-state drive.
- Do not touch the contact edge or circuit board of the M.2 solid-state drive. Otherwise, the M.2 solid-state drive might get damaged.
- Do not subject the M.2 solid-state drive to physical shocks or vibration. Put the M.2 solid-state drive on a soft material, such as cloth, to absorb physical shocks.

For access, remove this FRU:
- "Lenovo Integrated Pen and pen dummy (for selected models)" on page 33
- "Base cover assembly" on page 33

Tool needed: Phillips-head screwdriver

Step 1. Remove the M.2 solid-state drive and M.2 solid-state drive bracket as shown below.

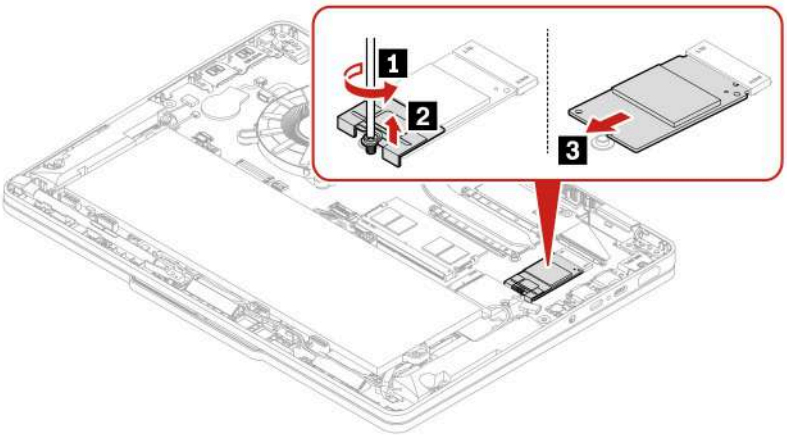

Step 2. Install the M.2 solid-state drive and M.2 solid-state drive bracket in reverse order.

When installing: Ensure the adhesive side of the thermal pad is attached on the system board if a singled-side adhesive thermal pad is used.

Wireless LAN module

Before you start, read *Generic Safety and Compliance Notices*.

For access, remove this FRU:
- "Lenovo Integrated Pen and pen dummy (for selected models)" on page 33
- "Base cover assembly" on page 33

Tool needed: Phillips-head screwdriver

Step 1. Remove the wireless LAN module as shown below.

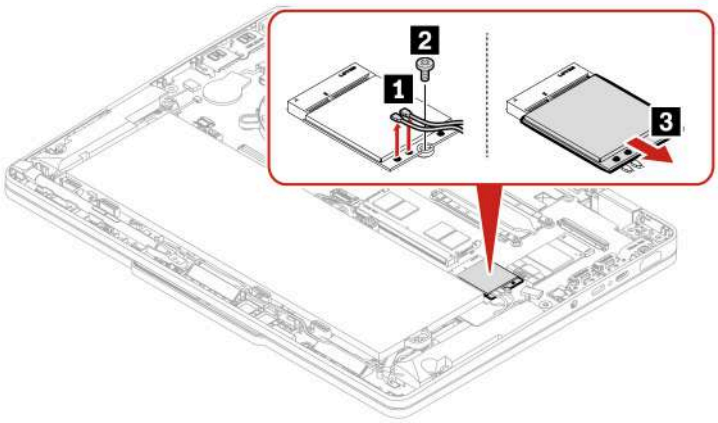

Step	Screw (quantity)	Color	Torque
2	M2 × 3 mm, flat-head, nylon-coated (1)	Silver	0.181 Nm (1.85 kgf-cm)

Step 2. Install the wireless LAN module in reverse order.
When installing: Plug the black cable into the main connector, and the yellow cable into the auxiliary connector.

Memory module

Before you start, read *Generic Safety and Compliance Notices*.

For access, remove this FRU:
- "Lenovo Integrated Pen and pen dummy (for selected models)" on page 33
- "Base cover assembly" on page 33

Step 1. Remove the memory module as shown below.

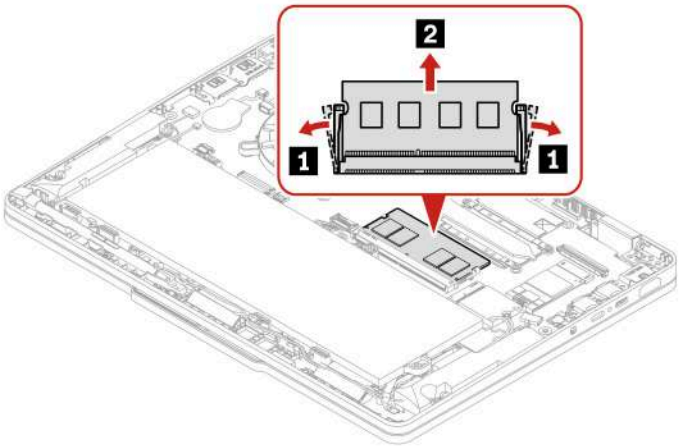

Step 2. Install the memory module as shown below.

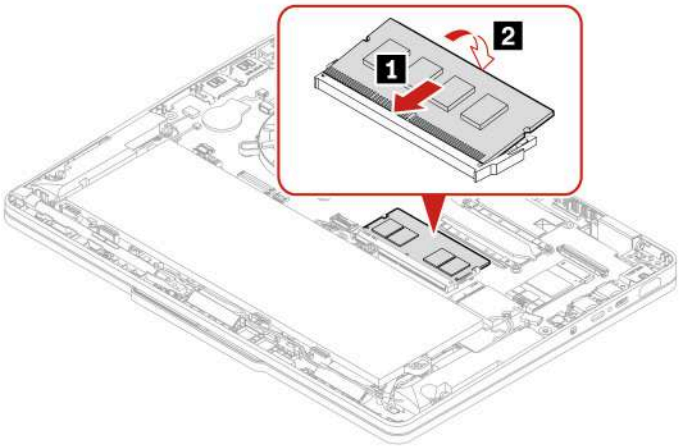

When installing: Insert the notched end of the memory module into the memory slot. Press the memory module in firmly, and pivot it downward until it snaps into place. Ensure that the memory module is firmly installed in the slot and does not move easily.

Replaceable USB-C module and replaceable USB-C module bracket (for selected models)

Before you start, read *Generic Safety and Compliance Notices*.

Attention: Replaceable USB-C module is available for selected models. You can check whether the USB-C module on your computer is CRUable based on the appearance of the USB-C module bracket and the quantity of USB-C module bracket screws. Refer to the table below for details.

USB-C module	USB-C module bracket	Screw quantity
CRUable	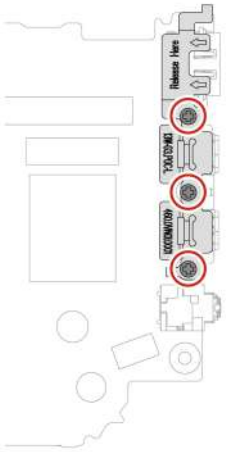	3
Non-CRUable	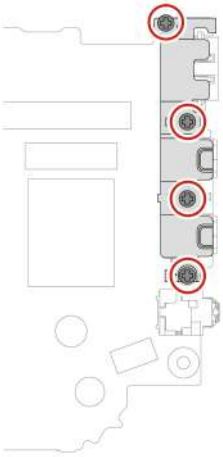	4

For access, remove this FRU:
- “Lenovo Integrated Pen and pen dummy (for selected models)” on page 33
- “Base cover assembly” on page 33

Tool needed: Phillips-head screwdriver

Attention: Do not touch the contact edge of the replaceable USB-C module. Otherwise, the replaceable USB-C module might get damaged.

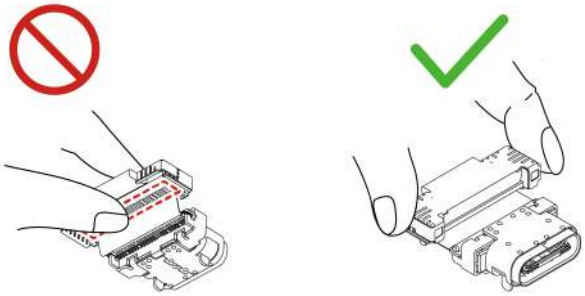

Step 1. Remove the replaceable USB-C module and its bracket as shown below.

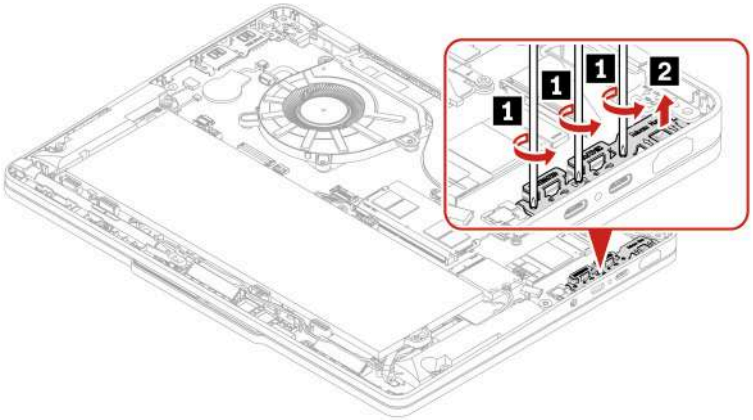

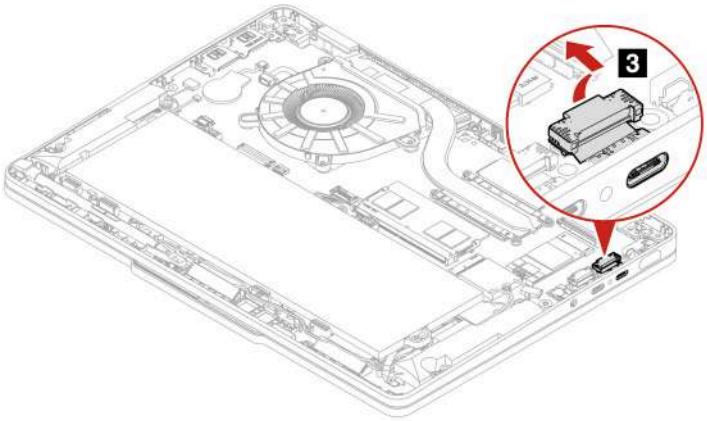

Step 2. Install the replaceable USB-C module and its bracket as shown below. When installing, ensure that the replaceable USB-C module is attached firmly.

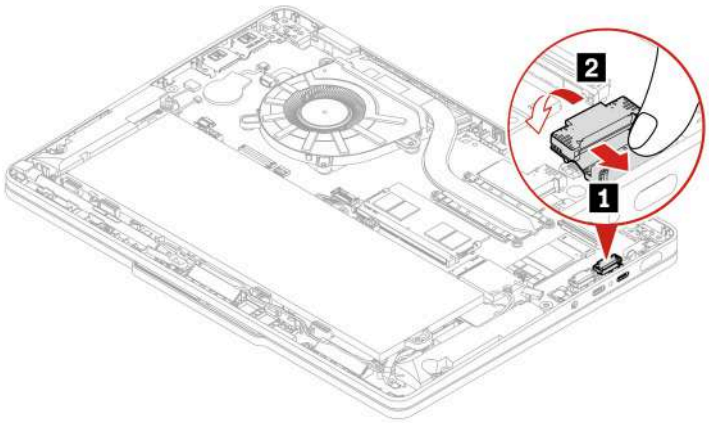

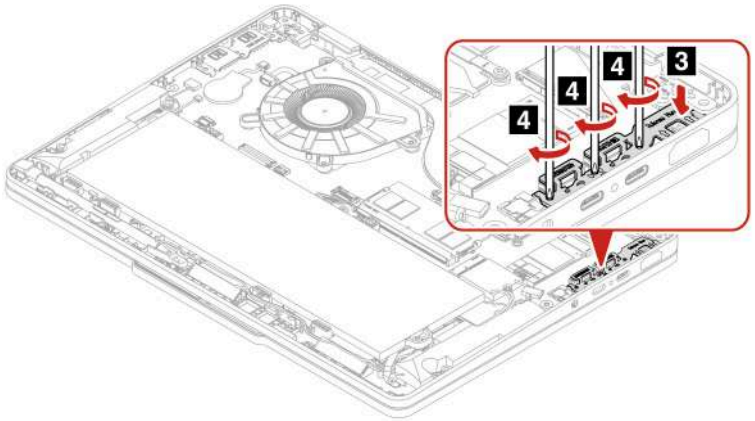

Note: If you are unable to determine whether the replaceable USB-C needs replacement, contact Lenovo Customer Support Center for assistance.

Heat sink

Before you start, read *Generic Safety and Compliance Notices*.

For access, remove this FRU:
- “Lenovo Integrated Pen and pen dummy (for selected models)” on page 33
- “Base cover assembly” on page 33

Tool needed: Phillips-head screwdriver

Step 1. Remove the heat sink as shown below.

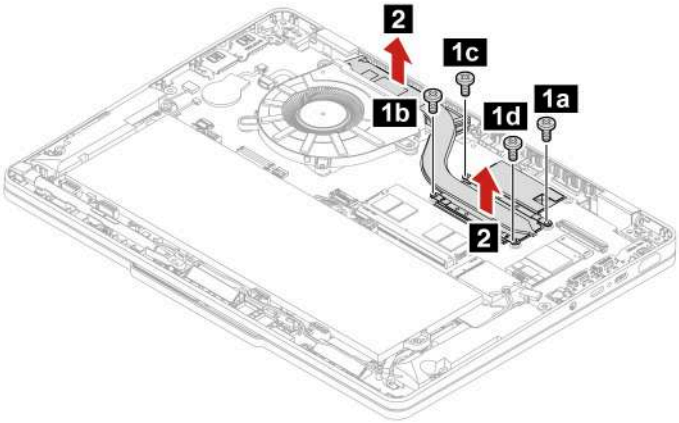

Step	Screw (quantity)	Color	Torque
1	M2 × 4 mm, flat-head, nylon-coated (4)	Silver	0.181 Nm (1.85 kgf-cm)

Step 2. Install the heat sink in reverse order.
When installing: Before you attach the heat sink to the computer, apply thermal grease, at an amount of 0.2 grams, on the parts marked 1 as shown in the following illustration. Either too much or too less application of grease can cause a thermal problem due to imperfect contact with a component. For the new heat sink, you must peel the thin film off from the rubbers.

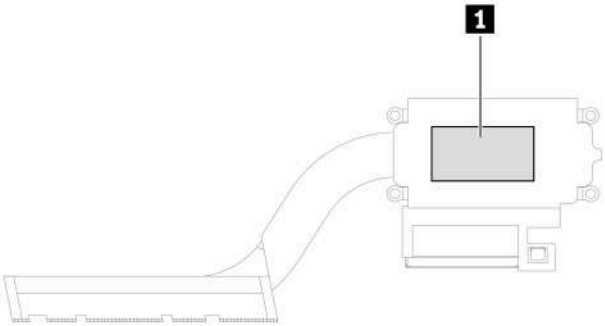

Thermal fan

Before you start, read *Generic Safety and Compliance Notices*.

For access, remove this FRU:
- "Lenovo Integrated Pen and pen dummy (for selected models)" on page 33
- "Base cover assembly" on page 33

Tool needed: Phillips-head screwdriver

Step 1. Remove the thermal fan as shown below.

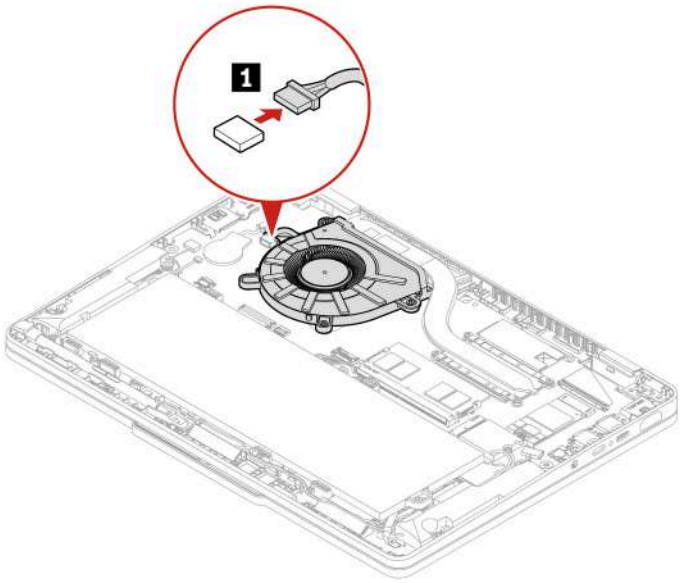

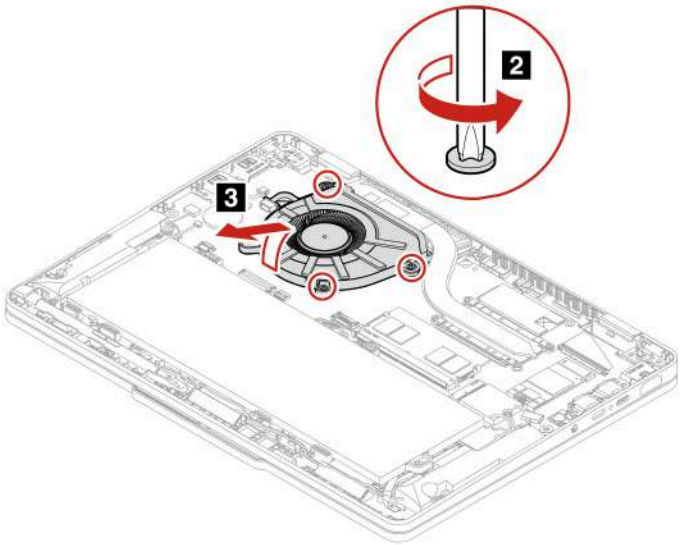

Step 2. Install the thermal fan in reverse order.

When installing:

- Ensure that the connector is attached firmly.
- Do not press the top of the fan cover and the fan hub.

Coin-cell battery

Before you start, read *Generic Safety and Compliance Notices*.

DANGER

Use only the Lenovo authorized battery specified for the computer. Any other battery could ignite or explode.

For access, remove this FRU:
- “Lenovo Integrated Pen and pen dummy (for selected models)” on page 33
- “Base cover assembly” on page 33

Step 1. Remove the coin-cell battery as shown below.

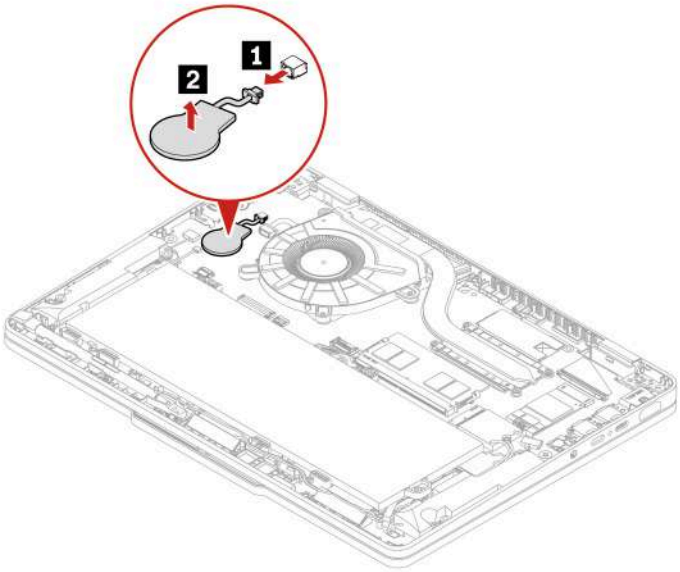

Step 2. Install the coin-cell battery in reverse order.
When installing:
- Ensure that the connector is attached firmly.
- Reset the system date and time in the BIOS menu.

Lenovo Integrated Pen charge board and cable (for selected models)

Before you start, read *Generic Safety and Compliance Notices*.

For access, remove these FRUs in order:
- “Lenovo Integrated Pen and pen dummy (for selected models)” on page 33
- “Base cover assembly” on page 33

Step 1. Remove the Lenovo Integrated Pen charge board and cable as shown below.

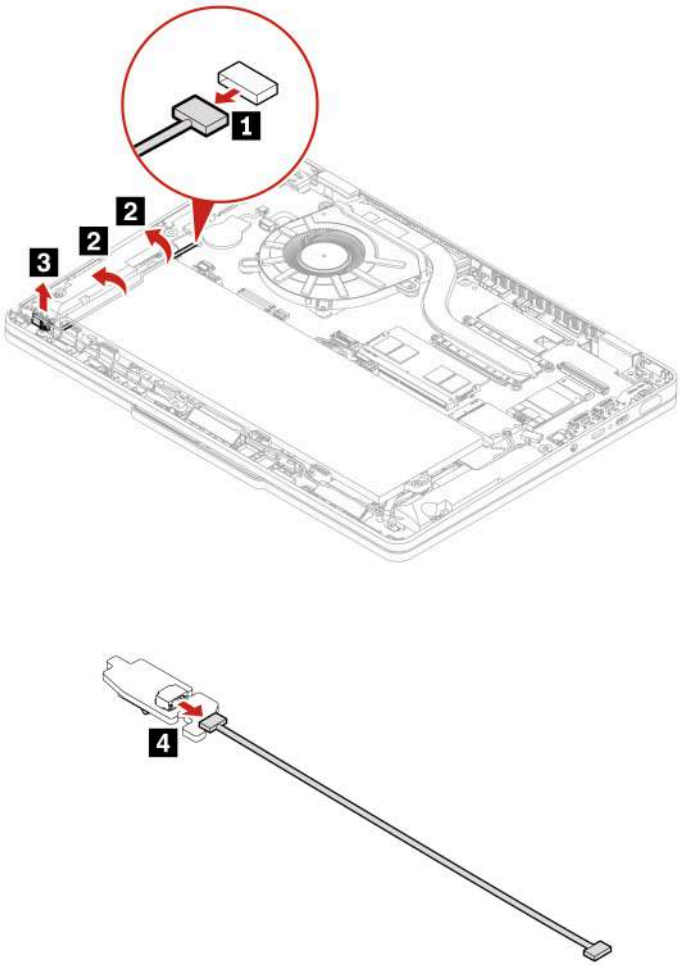

Step 2. Install the Lenovo Integrated Pen charge board and cable in reverse order.

I/O brackets

Before you start, read *Generic Safety and Compliance Notices*.

For access, remove this FRU:
- “Lenovo Integrated Pen and pen dummy (for selected models)” on page 33
- “Base cover assembly” on page 33

Tool needed: Phillips-head screwdriver

Step 1. Remove the I/O brackets as shown below.

For models with non-replaceable USB-C module

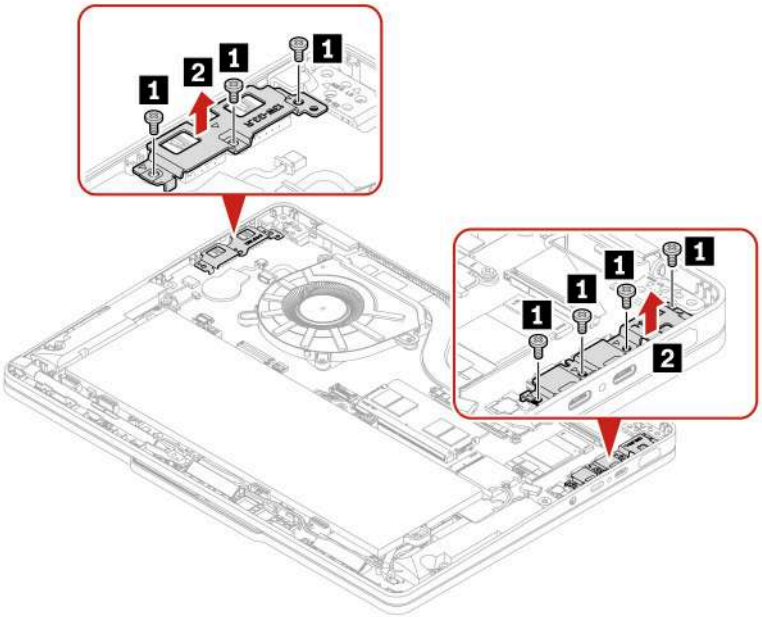

Step	Screw (quantity)	Color	Torque
1	M2 × 4 mm, flat-head, nylon-coated (7)	Silver	0.181 Nm (1.85 kgf-cm)

For models with replaceable USB-C module

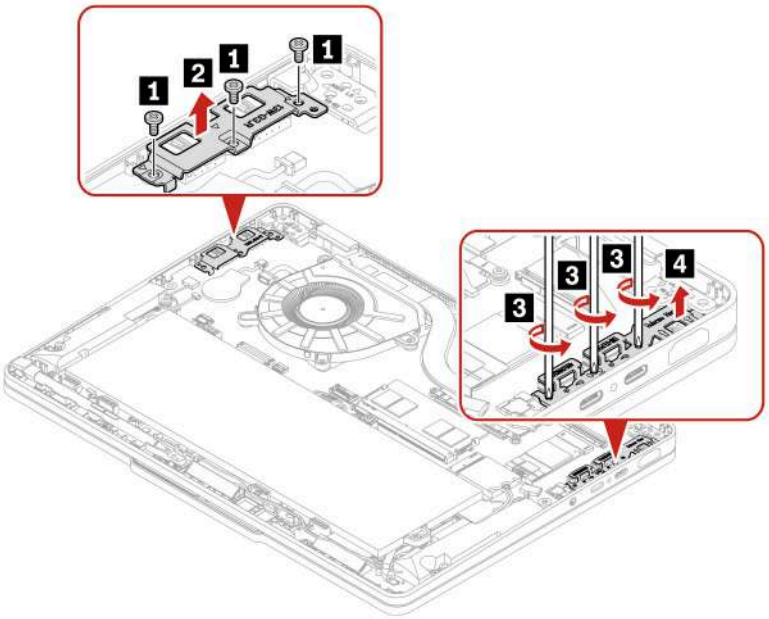

Step	Screw (quantity)	Color	Torque
1	M2 × 4 mm, flat-head, nylon-coated (3)	Silver	0.181 Nm (1.85 kgf-cm)

Step 2. Install the I/O brackets in reverse order.

Wireless LAN antenna assembly

Before you start, read *Generic Safety and Compliance Notices*.

For access, remove these FRUs in order:
- "Lenovo Integrated Pen and pen dummy (for selected models)" on page 33
- "Base cover assembly" on page 33
- "Built-in battery" on page 36

Step 1. Remove the Wireless LAN antenna assembly as shown below.

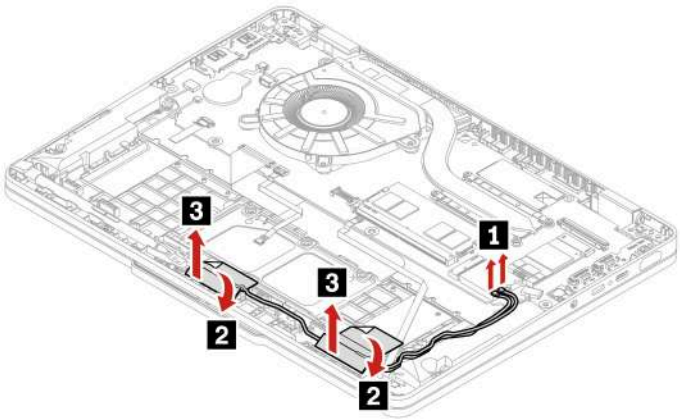

Step 2. Install the Wireless LAN antenna assembly in reverse order.

Attention: When you route the cables, ensure that they are not subject to any tension. Tension could cause the cables to be damaged by the cable guides, or a wire to be broken.

Antenna locations

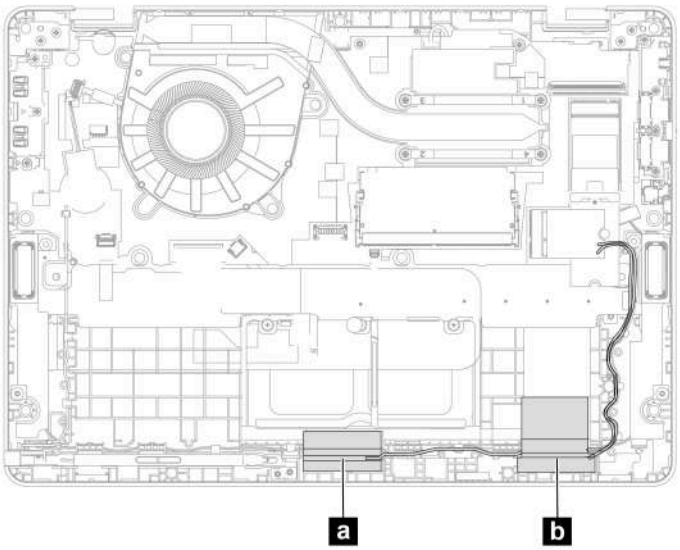

a Wireless LAN auxiliary antenna
b Wireless LAN main antenna

Speaker assembly

Before you start, read *Generic Safety and Compliance Notices*.

For access, remove these FRUs in order:

- “Lenovo Integrated Pen and pen dummy (for selected models)” on page 33
- “Base cover assembly” on page 33
- “Built-in battery” on page 36
- “Lenovo Integrated Pen charge board and cable (for selected models)” on page 47
- “Wireless LAN antenna assembly” on page 50

Step 1. Remove the speaker assembly as shown below.

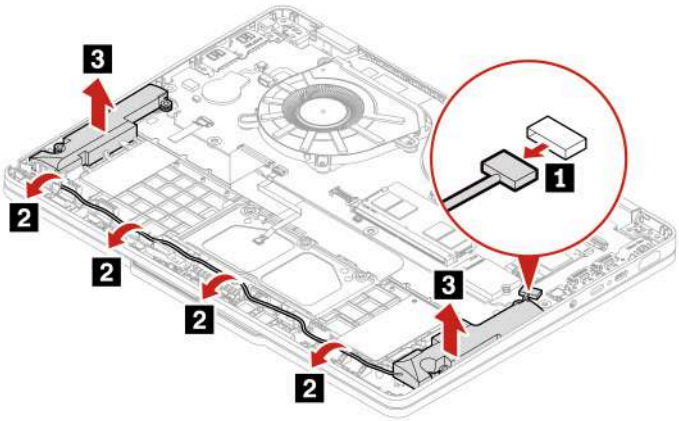

Step 2. **When installing:**

- Ensure that the connector is attached firmly.
- Ensure that the cable is routed properly.

System board

Before you start, read *Generic Safety and Compliance Notices*.

Important notices for handling the system board:

When handling the system board, read the following:

- Some components mounted on a system board are very sensitive. Improper handling of a system board can cause damage to those components, and may cause a system malfunction.
- The system board has an accelerometer, which can be broken when several thousands of G-forces are applied.

  Note: Dropping a system board from a height of as little as 6 inches so that it falls flat on a hard bench can subject the accelerometer to as much as 6000 G's of shock.
- Be careful not to drop the system board on a bench top that has a hard surface, such as metal, wood, or composite.
- Avoid rough handling of any kind.
- At every point in the process, be sure not to drop or stack the system board.
- If you put a system board down, be sure to put it only on a padded surface such as an ESD mat or a corrugated conductive surface.
- Avoid bending a system board and hard pushing to prevent cracking at each BGA (Ball Grid Array) chipset.

For models with replaceable USB-C module

For access, remove these FRUs in order:

- “Lenovo Integrated Pen and pen dummy (for selected models)” on page 33
- “Base cover assembly” on page 33
- “Built-in battery” on page 36
- “M.2 solid-state drive and M.2 solid-state drive bracket” on page 39
- “Wireless LAN module” on page 40
- “Memory module” on page 41
- “Replaceable USB-C module and replaceable USB-C module bracket (for selected models)” on page 42
- “Heat sink” on page 44
- “Thermal fan” on page 45
- “Coin-cell battery” on page 46
- “I/O brackets” on page 48

Tool needed: Phillips-head screwdriver

Step 1. Remove the system board as shown below.

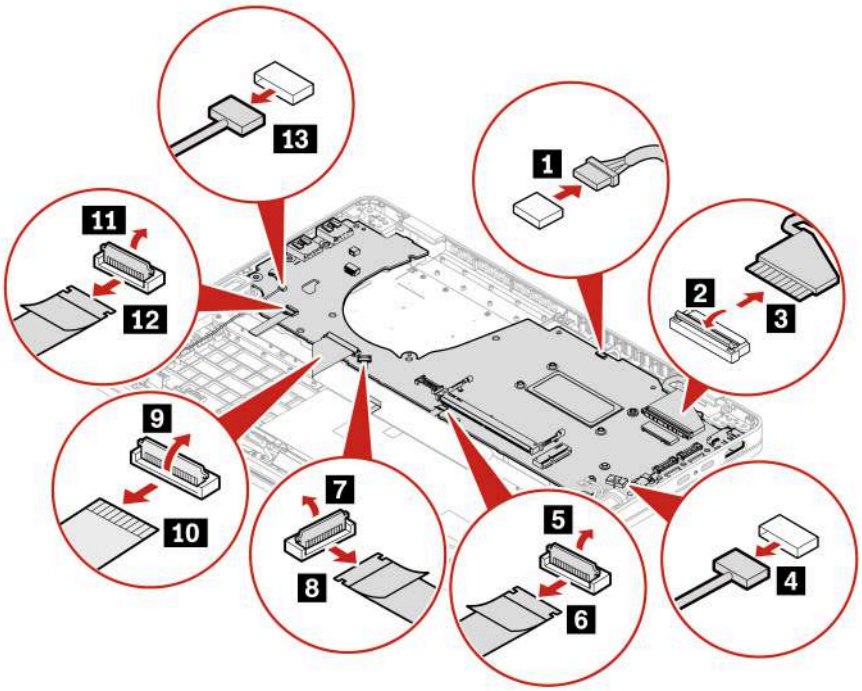

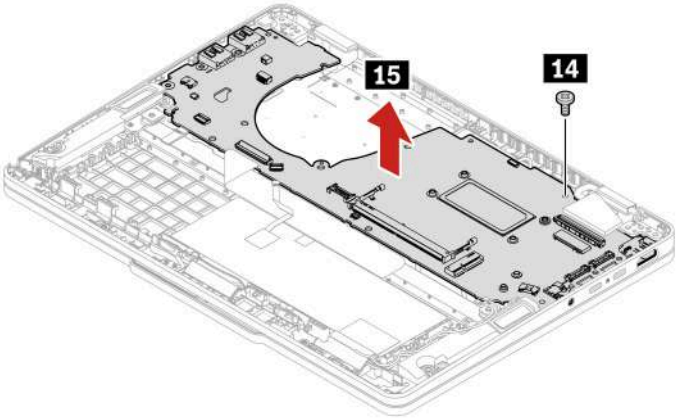

Step	Screw (quantity)	Color	Torque
14	M2 × 4 mm, flat head, nylon-coated (1)	Silver	0.181 Nm (1.85 kgf-cm)

Step 2. Install the system board in reverse order.

Notes:

- Ensure that the cable is attached firmly.
- Apply thermal grease on the heat sink if needed. For details, see “Heat sink” on page 44.
- Ensure the adhesive side of the thermal pad is attached on the system board if a single-sided adhesive thermal pad is in use with the M.2 solid-state drive.

For models with non-replaceable USB-C module

For access, remove these FRUs in order:

- “Lenovo Integrated Pen and pen dummy (for selected models)” on page 33
- “Base cover assembly” on page 33
- “Built-in battery” on page 36
- “M.2 solid-state drive and M.2 solid-state drive bracket” on page 39
- “Wireless LAN module” on page 40
- “Memory module” on page 41
- “Heat sink” on page 44
- “Thermal fan” on page 45
- “Coin-cell battery” on page 46
- “I/O brackets” on page 48

Tool needed: Phillips-head screwdriver

Step 1. Remove the system board as shown below.

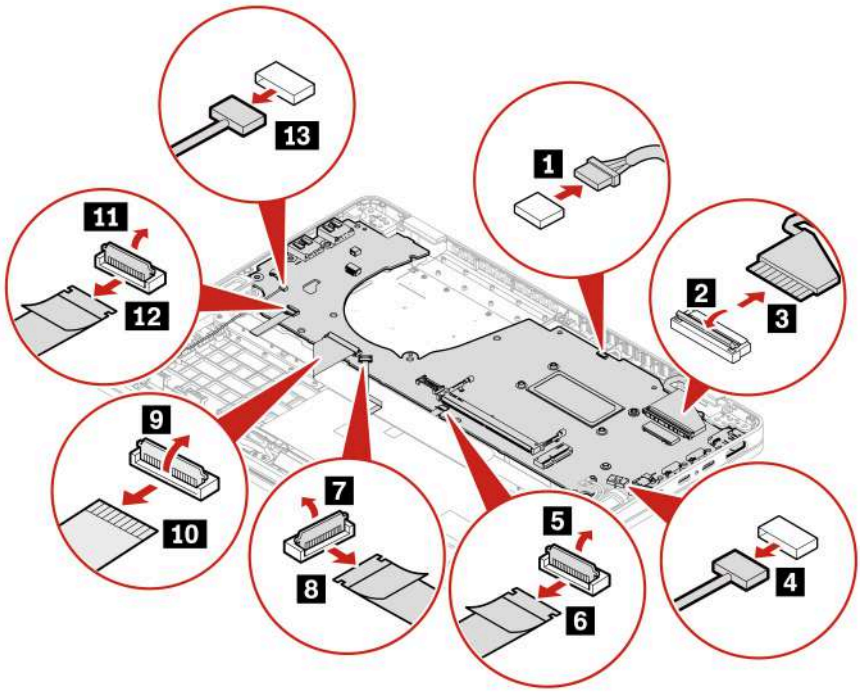

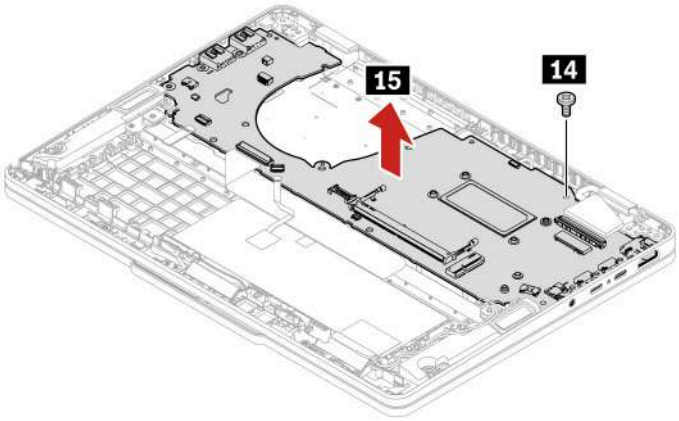

Step	Screw (quantity)	Color	Torque
14	M2 × 4 mm, flat head, nylon-coated (1)	Silver	0.181 Nm (1.85 kgf-cm)

Step 2. Install the system board in reverse order.

Notes:

- Ensure that the cable is attached firmly.
- Apply thermal grease on the heat sink if needed. For details, see “Heat sink” on page 44.
- Ensure the adhesive side of the thermal pad is attached on the system board if a single-sided adhesive thermal pad is in use with the M.2 solid-state drive.

How to input the product information with Lenovo system board self repair tool

To restore the BIOS configuration, you are required to input the Machine Type Model (MTM) and Serial Number (SN), select the product name and keyboard language of the computer after replacing a system board. For more details about the tool, go to:
https://support.lenovo.com/solutions/HT516532

Note: Ensure that the correct product information is input into the tool. **The input cannot be edited by end users once confirmed through the tool.** If the user exits during the process, a warning message (01800083: System SN or MTM is INVALID) will be displayed each time the computer is turned on until the input is confirmed. The process of writing product information can only be used once and if unsure, consider getting support from a Lenovo-authorized service technician.

Step 1. Connect the ac power adapter and turn on the computer.

Step 2. Download the tool package and double-click the WinMBDWizard.exe file to run the tool. To download the tool, go to https://support.lenovo.com/solutions/HT516532.

Note: The tool is intended only for Microsoft Windows operating system.

Step 3. Follow the on-screen instructions to input the MTM and SN, select the product name and keyboard language of the computer.

Step 4. Click **Start Update** to update the product information.

Step 5. Click **Yes** in the confirmation window to continue the update.

Step 6. Click **Finish** to close the tool.

Step 7. Click **Yes** in the confirmation window to restart the computer and apply the configuration on the system board. Do not turn off the computer and disconnect the computer from ac power during the whole process.

Rear camera-and-microphone module and cable

Before you start, read *Generic Safety and Compliance Notices*.

For access, remove these FRUs in order:

- "Lenovo Integrated Pen and pen dummy (for selected models)" on page 33
- "Base cover assembly" on page 33
- "Built-in battery" on page 36
- "M.2 solid-state drive and M.2 solid-state drive bracket" on page 39
- "Wireless LAN module" on page 40
- "Memory module" on page 41
- "Replaceable USB-C module and replaceable USB-C module bracket (for selected models)" on page 42
- "Heat sink" on page 44
- "Thermal fan" on page 45
- "Coin-cell battery" on page 46
- "I/O brackets" on page 48
- "System board" on page 52

Step 1. Remove the rear camera-and-microphone module and cable as shown below.

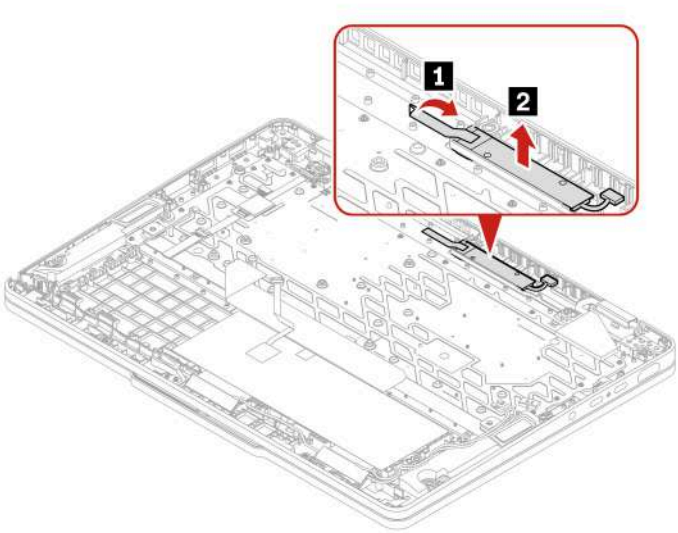

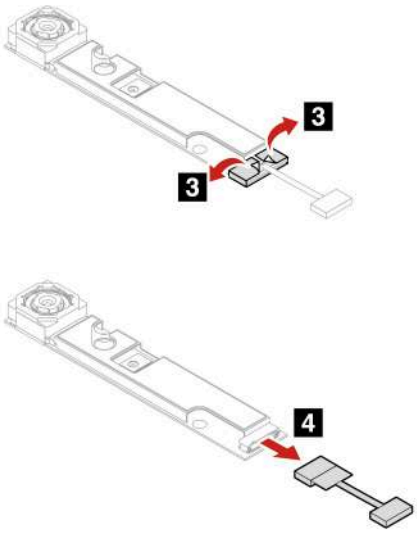

Step 2. Install the rear camera-and-microphone module and cable in reverse order.

When installing: Ensure that the connector is attached firmly.

Power button with or without fingerprint reader

Before you start, read *Generic Safety and Compliance Notices*.

For access, remove these FRUs in order:

- “Lenovo Integrated Pen and pen dummy (for selected models)” on page 33
- “Base cover assembly” on page 33
- “Built-in battery” on page 36
- “M.2 solid-state drive and M.2 solid-state drive bracket” on page 39
- “Wireless LAN module” on page 40
- “Memory module” on page 41
- “Replaceable USB-C module and replaceable USB-C module bracket (for selected models)” on page 42
- “Heat sink” on page 44
- “Thermal fan” on page 45
- “Coin-cell battery” on page 46
- “I/O brackets” on page 48
- “System board” on page 52

For models with fingerprint reader

Step 1. Remove the power button with fingerprint reader as shown below.

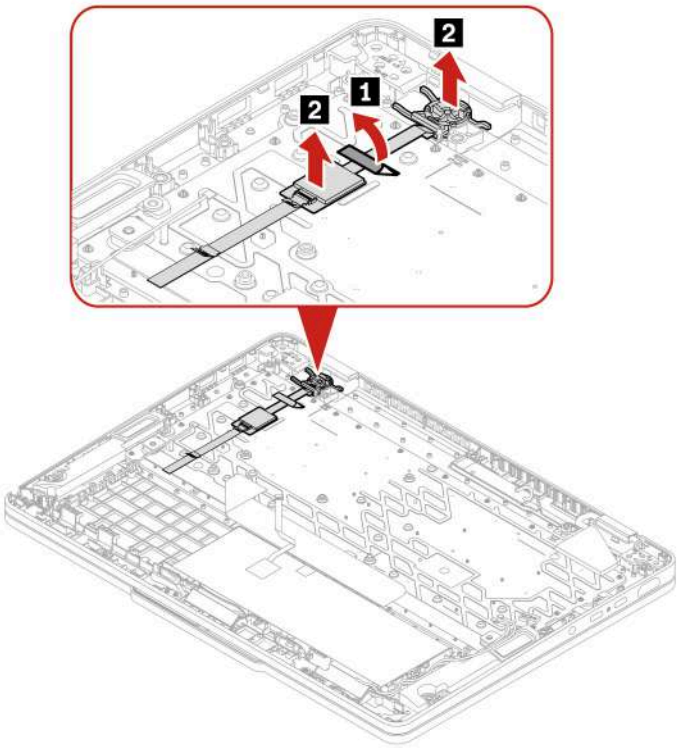

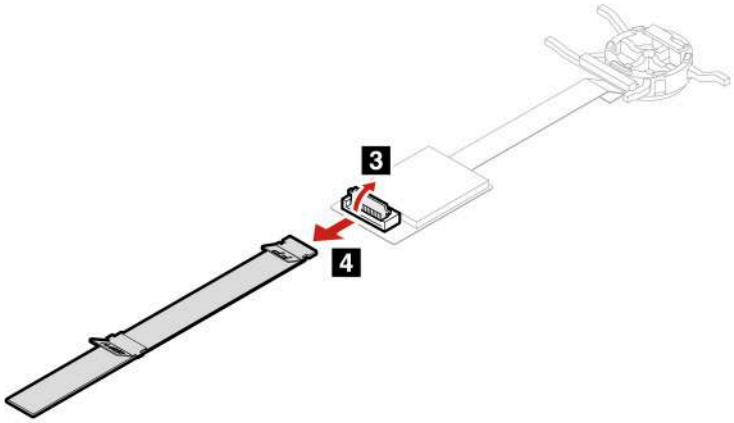

Step 2. Install the power button with fingerprint reader in reverse order.

For models without fingerprint reader

Step 1. Remove the power button without fingerprint reader as shown below.

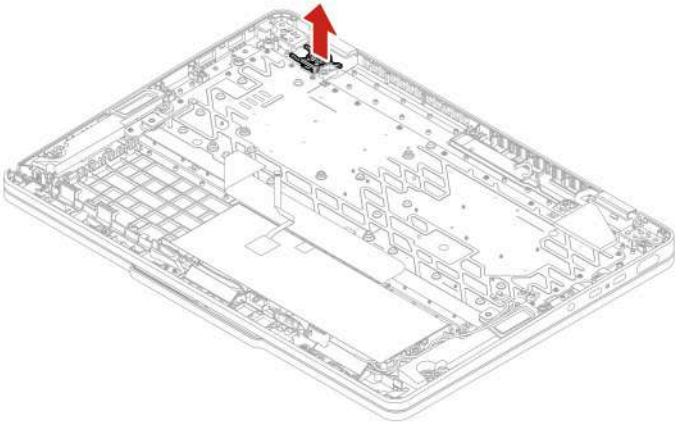

Step 2. Install the power button without fingerprint reader in reverse order.

LCD unit

Before you start, read *Generic Safety and Compliance Notices*.

For access, remove this FRU:

- "Lenovo Integrated Pen and pen dummy (for selected models)" on page 33
- "Base cover assembly" on page 33

Tool needed: Phillips-head screwdriver

Step 1. Remove the LCD unit as shown below.

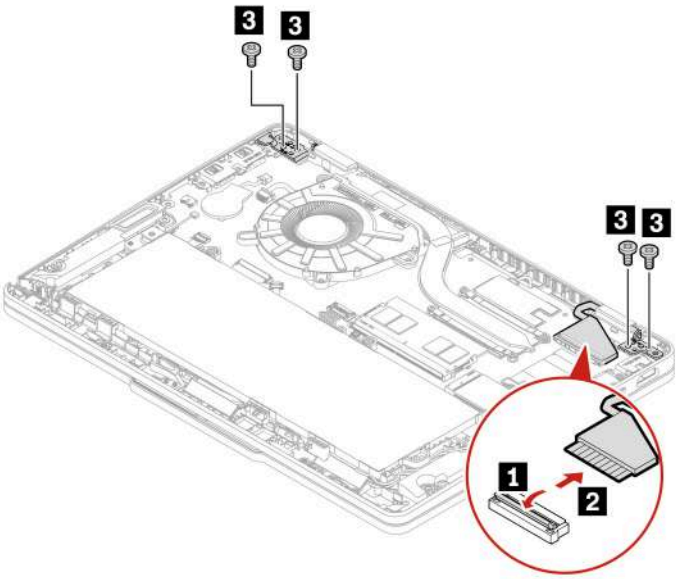

Step	Screw (quantity)	Color	Torque
3	M 2.5 × 5 mm, flat-head, nylon-coated (4)	Silver	0.294 Nm (3.0 kgf-cm)

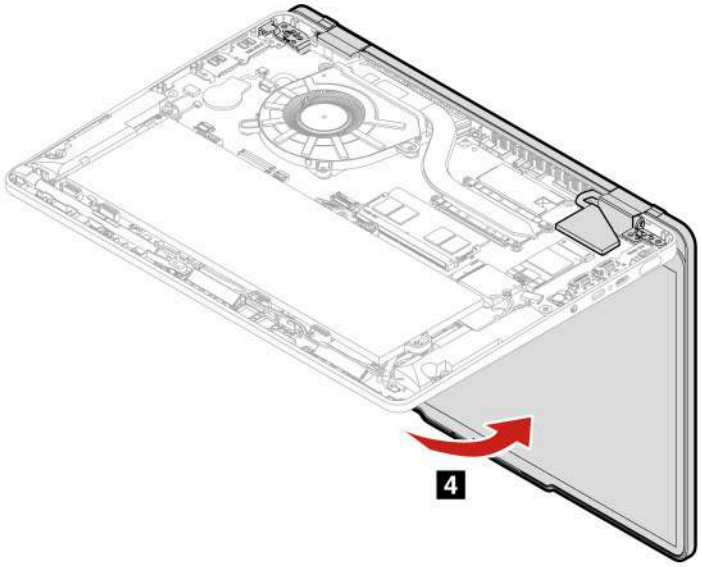

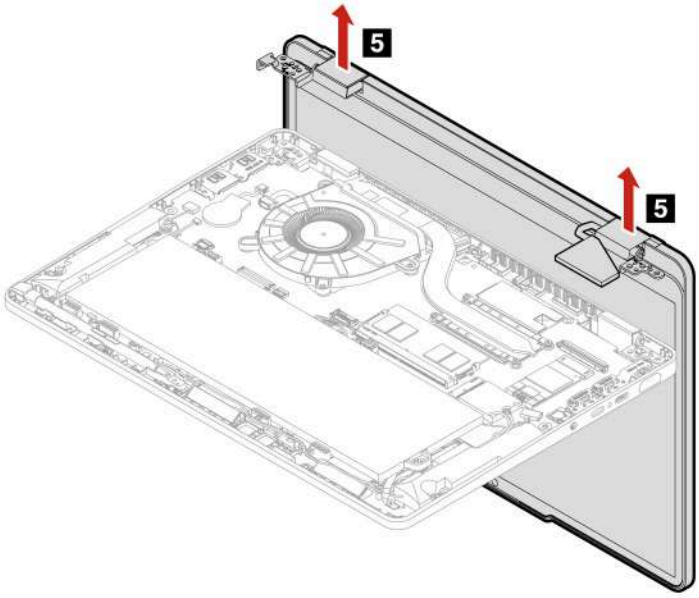

Step 2. Install the LCD unit in reverse order. When installing, ensure that the connector is attached firmly.

LCD strip cover

Before you start, read *Generic Safety and Compliance Notices*.

For access, remove these FRUs in order:
- “Lenovo Integrated Pen and pen dummy (for selected models)” on page 33
- “Base cover assembly” on page 33
- “LCD unit” on page 59

Tool needed: Pry tool

Step 1. Remove the LCD strip cover as shown below.

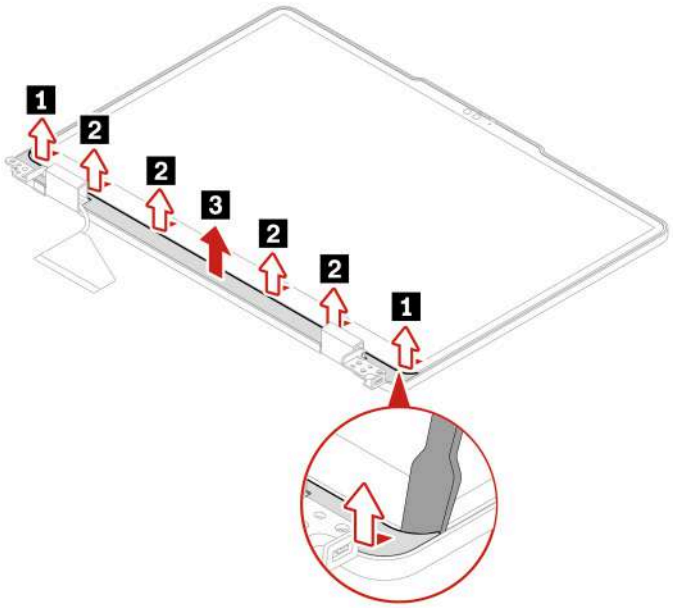

Step 2. Install the LCD strip cover in reverse order.

Touch module assembly

Before you start, read *Generic Safety and Compliance Notices*.

For access, remove these FRUs in order:
- “Lenovo Integrated Pen and pen dummy (for selected models)” on page 33
- “Base cover assembly” on page 33
- “LCD unit” on page 59
- “LCD strip cover” on page 60

Tool needed: Phillips-head screwdriver

Step 1. Remove the touch module assembly as shown below.

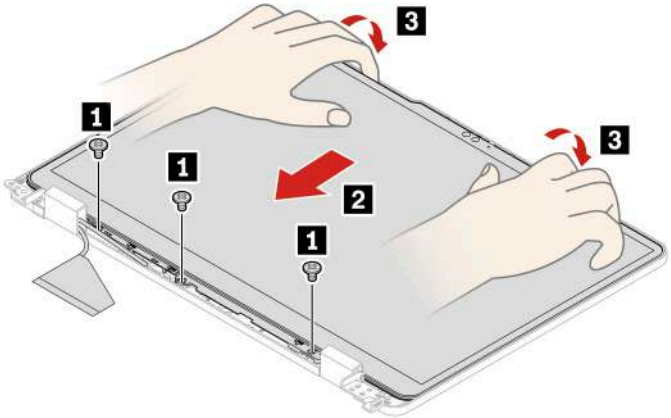

Step	Screw (quantity)	Color	Torque
1	M2 × 3 mm, flat-head, nylon-coated (3)	Sliver	0.181 Nm (1.85 kgf-cm)

Notes:

- In step 2, use your palms to slide down the LCD panel to loosen its hooks.
- Do not pry up the panel, or the hooks might get damaged.

Step 2. Install the touch module assembly in reverse order.

Gravity sensor board and LCD-and-camera cable

Before you start, read *Generic Safety and Compliance Notices*.

For access, remove these FRUs in order:

- “Lenovo Integrated Pen and pen dummy (for selected models)” on page 33
- “Base cover assembly” on page 33
- “LCD unit” on page 59
- “LCD strip cover” on page 60
- “Touch module assembly” on page 61

Step 1. Remove the gravity sensor board and LCD-and-camera cable as shown below.

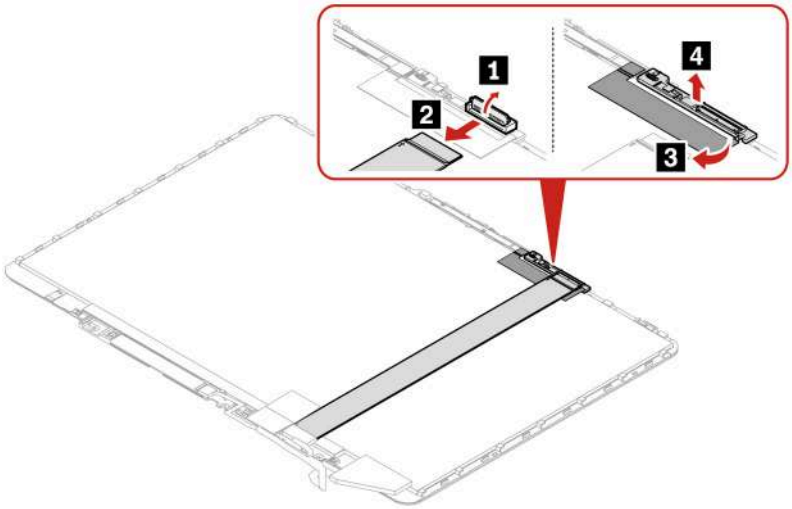

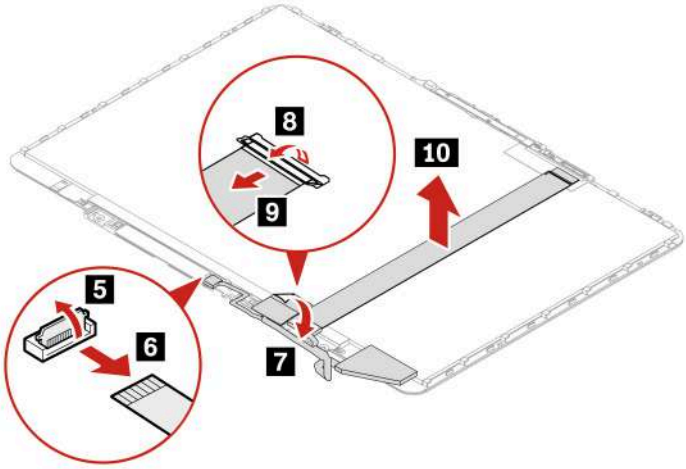

Step 2. Install the gravity sensor board and LCD-and-camera cable in reverse order.

Camera-and-microphone module

Before you start, read *Generic Safety and Compliance Notices*.

For access, remove these FRUs in order:

- “Lenovo Integrated Pen and pen dummy (for selected models)” on page 33
- “Base cover assembly” on page 33
- “LCD unit” on page 59
- “LCD strip cover” on page 60
- “Touch module assembly” on page 61
- “Gravity sensor board and LCD-and-camera cable” on page 62

Step 1. Remove the camera-and-microphone module as shown below.

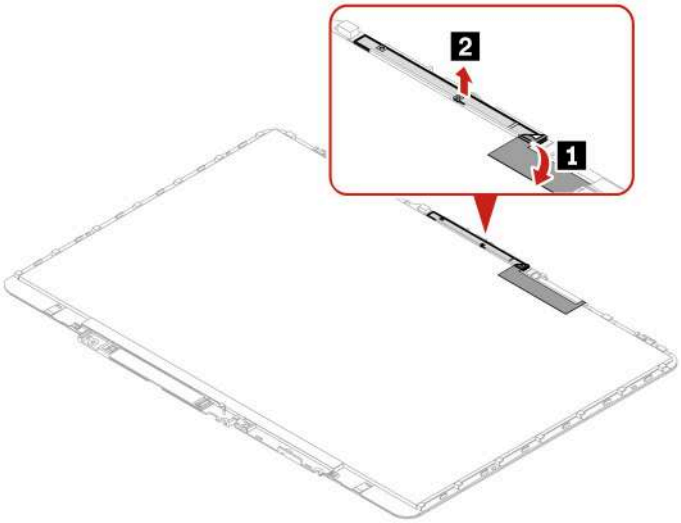

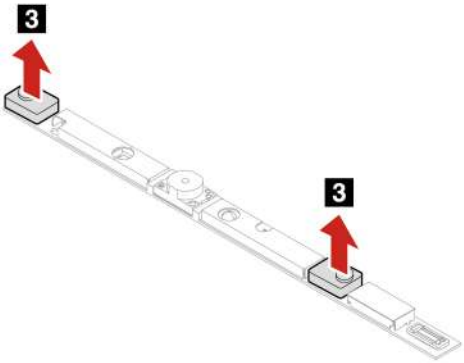

Step 2. Install the camera-and-microphone module in reverse order.

LCD hinges

Before you start, read *Generic Safety and Compliance Notices*.

For access, remove these FRUs in order:

- “Lenovo Integrated Pen and pen dummy (for selected models)” on page 33
- “Base cover assembly” on page 33
- “LCD unit” on page 59
- “LCD strip cover” on page 60
- “Touch module assembly” on page 61

Tool needed: Phillips-head screwdriver

Step 1. Remove the LCD hinges as shown below.

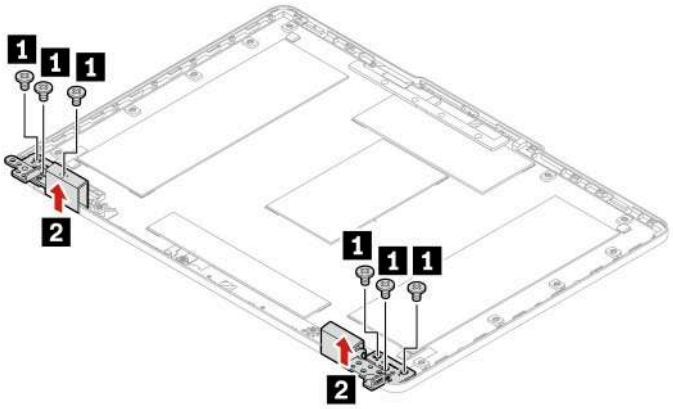

Step	Screw (quantity)	Color	Torque
1	M2.5 × 2.5 mm, flat-head, nylon-coated (6)	Silver	0.294 Nm (3.0 kgf-cm)

Step 2. Install the LCD hinges in reverse order.

LCD cover assembly

For access, remove these FRUs in order:

- “Lenovo Integrated Pen and pen dummy (for selected models)” on page 33
- “Base cover assembly” on page 33
- “LCD unit” on page 59
- “LCD strip cover” on page 60
- “Touch module assembly” on page 61
- “LCD hinges” on page 64

Keyboard-and-trackpad assembly

For access, remove these FRUs in order:

- “Lenovo Integrated Pen and pen dummy (for selected models)” on page 33
- “Base cover assembly” on page 33
- “Built-in battery” on page 36
- “M.2 solid-state drive and M.2 solid-state drive bracket” on page 39
- “Wireless LAN module” on page 40
- “Memory module” on page 41
- “Replaceable USB-C module and replaceable USB-C module bracket (for selected models)” on page 42
- “Heat sink” on page 44
- “Thermal fan” on page 45
- “Coin-cell battery” on page 46
- “Lenovo Integrated Pen charge board and cable (for selected models)” on page 47
- “I/O brackets” on page 48
- “System board” on page 52
- “Rear camera-and-microphone module and cable” on page 56
- “Power button with or without fingerprint reader” on page 57
- “LCD unit” on page 59

When installing: Ensure that the trackpad waterproof mylar is attached after replacement.

Appendix A. Important notice for Quebec consumers

In regard to section 79.18 of Quebec's Regulation respecting the application of the Consumer Protection Act, Lenovo in no way guarantees the availability of (a) replacement parts; (b) repair services; and (c) information necessary to maintain or repair the goods. For up-to-date information on the technical support and parts available for your purchase, please consult **https://support.lenovo.com/ca/en**.

En ce qui concerne l'article 79.18 du Règlement d'application de la Loi sur la protection du consommateur du Québec, Lenovo ne garantit en aucune façon la disponibilité des éléments suivants :(a) les pièces de rechange; (b) les services de réparation; et (c) les renseignements nécessaires à l'entretien à la réparation du bien. Pour obtenir des renseignements à jour sur le soutien technique et les pièces disponibles pour votre achat, veuillez consulter **https://support.lenovo.com/ca/fr**.

© Copyright Lenovo 2025, 2026

Appendix B. Notices

Lenovo may not offer the products, services, or features discussed in this document in all countries. Consult your local Lenovo representative for information on the products and services currently available in your area. Any reference to a Lenovo product, program, or service is not intended to state or imply that only that Lenovo product, program, or service may be used. Any functionally equivalent product, program, or service that does not infringe any Lenovo intellectual property right may be used instead. However, it is the user's responsibility to evaluate and verify the operation of any other product, program, or service.

Lenovo may have patents or pending patent applications covering subject matter described in this document. The furnishing of this document does not give you any license to these patents. You can send license inquiries, in writing, to:

Lenovo (United States), Inc.
8001 Development Drive
Morrisville, NC 27560
U.S.A.
Attention: Lenovo Director of Licensing

LENOVO PROVIDES THIS PUBLICATION "AS IS" WITHOUT WARRANTY OF ANY KIND, EITHER EXPRESS OR IMPLIED, INCLUDING, BUT NOT LIMITED TO, THE IMPLIED WARRANTIES OF NON-INFRINGEMENT, MERCHANTABILITY OR FITNESS FOR A PARTICULAR PURPOSE. Some jurisdictions do not allow disclaimer of express or implied warranties in certain transactions, therefore, this statement may not apply to you.

This information could include technical inaccuracies or typographical errors. Changes are periodically made to the information herein; these changes will be incorporated in new editions of the publication. Lenovo may make improvements and/or changes in the product(s) and/or the program(s) described in this publication at any time without notice.

The products described in this document are not intended for use in implantation or other life support applications where malfunction may result in injury or death to persons. The information contained in this document does not affect or change Lenovo product specifications or warranties. Nothing in this document shall operate as an express or implied license or indemnity under the intellectual property rights of Lenovo or third parties. All information contained in this document was obtained in specific environments and is presented as an illustration. The result obtained in other operating environments may vary.

Lenovo may use or distribute any of the information you supply in any way it believes appropriate without incurring any obligation to you.

Any references in this publication to non-Lenovo Web sites are provided for convenience only and do not in any manner serve as an endorsement of those Web sites. The materials at those Web sites are not part of the materials for this Lenovo product, and use of those Web sites is at your own risk.

Any performance data contained herein was determined in a controlled environment. Therefore, the result obtained in other operating environments may vary significantly. Some measurements may have been made on development-level systems and there is no guarantee that these measurements will be the same on generally available systems. Furthermore, some measurements may have been estimated through extrapolation. Actual results may vary. Users of this document should verify the applicable data for their specific environment.

© Copyright Lenovo 2025, 2026

Trademarks

Lenovo, the Lenovo logo, and ThinkPad are trademarks of Lenovo. Microsoft and Windows are trademarks of the Microsoft group of companies. The terms HDMI and HDMI High-Definition Multimedia Interface are trademarks or registered trademarks of HDMI Licensing LLC in the United States and other countries. USB-C is a registered trademark of USB Implementers Forum. All other trademarks are the property of their respective owners.

Appendix C. Abbreviation table

The following table lists all abbreviations used in this manual.

Abbreviation	Term
BGA	Ball Grid Array
CMOS	Complementary Metal Oxide Semiconductor
CMV	Custom Model Variant
CRC	Cyclic redundancy check
CRT	Cathode ray tube
CRU	Customer Replaceable Unit
CTO	Configure To Order
EAIA	Enhanced Asset Information Area
EEPROM	Electrically Erasable Programmable Read-Only Memory
EFI	Extensible Firmware Interface
ESD	Electrostatic discharge
FRU	Field Replaceable Unit
GAV	General Announce Variant
IC	Integrated circuits
LCD	Liquid Crystal Display
MTM	Machine type and model
POST	Power-on self-test
RFID	Radio-frequency identification
SVP	Supervisor password
UUID	Universally unique identifier

© Copyright Lenovo 2025, 2026

Part Number: SP41Q96422

Printed in China

(1P) P/N: SP41Q96422