# Lenovo IdeaPad C340-14API
# User Guide

**Read this first**

Before using this documentation and the product it supports, ensure that you read and understand the following:

- Appendix A “Important safety information” on page 33
- *Safety and Warranty Guide*
- *Setup Guide*

**First Edition (December 2018)**

**© Copyright Lenovo 2018.**

LIMITED AND RESTRICTED RIGHTS NOTICE: If data or software is delivered pursuant to a General Services Administration “GSA” contract, use, reproduction, or disclosure is subject to restrictions set forth in Contract No. GS-35F-05925.

# Contents


**About this documentation . . . . . iii**

**Chapter 1. Meet your computer . . . . . 1**
Front . . . . . 1
Base . . . . . 2
Left . . . . . 3
Right . . . . . 4
Features and specifications . . . . . 5
Statement on USB transfer rate . . . . . 6

**Chapter 2. Get started with your computer . . . . . 7**
Get started with Windows 10 . . . . . 7
Windows account . . . . . 7
Windows user interface . . . . . 8
Windows label . . . . . 9
Connect to networks . . . . . 9
Use Lenovo Vantage . . . . . 10
Interact with your computer . . . . . 11
Hotkeys . . . . . 11
Use the multi-touch screen . . . . . 12
Use multimedia . . . . . 13
Use audio . . . . . 13
Use the camera . . . . . 13
Connect to an external display . . . . . 13
Operating modes . . . . . 15
Lenovo Digital Pen. . . . . 16

**Chapter 3. Explore your computer . . 17**
Manage power . . . . . 17
Check the battery status . . . . . 17
Charge the battery . . . . . 17
Check the battery temperature . . . . . 17
Maximize the battery life . . . . . 17
Set power button behaviors . . . . . 17
Set the power plan . . . . . 18
Transfer data . . . . . 18
Connect a Bluetooth-enabled device. . . . . 18
Use a media card . . . . . 18
Airplane mode . . . . . 19

**Chapter 4. Secure your computer and information . . . . . 21**
Use passwords . . . . . 21
Password types . . . . . 21
Set administrator password . . . . . 21
Change or remove administrator password . . 21
Set user password . . . . . 22
Enable power-on password . . . . . 22
Set hard disk password . . . . . 22
Change or remove hard disk password . . . . 23
Use the fingerprint reader . . . . . 23
Use firewalls and antivirus programs. . . . . 23

**Chapter 5. Configure advanced settings. . . . . 25**
UEFI/BIOS . . . . . 25
What is UEFI/BIOS setup utility . . . . . 25
Start the UEFI/BIOS setup utility . . . . . 25
Navigate in the UEFI/BIOS interface . . . . . 25
Change the startup sequence . . . . . 25
Set the system date and time. . . . . 26
Enable/Disable hotkey mode . . . . . 26
Enable/Disable always-on . . . . . 26
Update UEFI/BIOS . . . . . 26
Recovery information . . . . . 26
Reset your computer . . . . . 26
Use advanced options . . . . . 27
Windows automatic recovery. . . . . 27
Create and use a recovery USB device . . . . 27

**Chapter 6. Help and support . . . . . 29**
Frequently asked questions . . . . . 29
Self-help resources . . . . . 30
Call Lenovo . . . . . 31
Before you contact Lenovo . . . . . 31
Lenovo Customer Support Center . . . . . 31
Purchase additional services. . . . . 32

**Appendix A. Important safety information. . . . . 33**

**Appendix B. Accessibility and ergonomic information . . . . . 47**

**Appendix C. Compliance information. . . . . 51**

**Appendix D. Notices and trademarks. . . . . 63**


© Copyright Lenovo 2018

# About this documentation

- Illustrations in this documentation might look different from your product.
- This documentation applies to models listed in the following table. Depending on the model, some optional accessories, features, and software programs might not be available on your computer.
- Depending on the version of operating systems, some user interface instructions might not be applicable to your computer.
- Documentation content is subject to change without notice. Lenovo makes constant improvements on the documentation of your computer, including this *User Guide*. To get the latest documentation, go to https://support.lenovo.com.
- Microsoft® makes periodic feature changes to the Windows® operating system through Windows Update. As a result, some information in this documentation might become outdated. Refer to Microsoft resources for the latest information.

| **Model name** | **MT** |
|---|---|
| Lenovo IdeaPad C340-14API | 81N6 |

© Copyright Lenovo 2018

# Chapter 1. Meet your computer

## Front

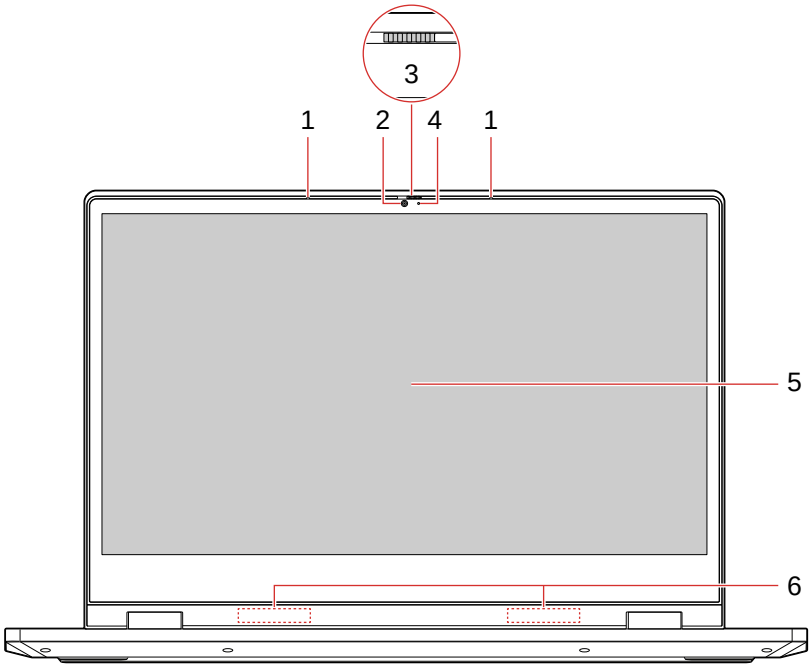


| | |
|---|---|
| 1. Microphones | Capture or record sound and voice. |
| 2. Camera | Take pictures or record videos by clicking **Camera** from the Start menu.<br><br>If you use other apps that support photographing, video chatting, and video conference, the camera starts automatically when you enable the camera-required feature from the app. |
| 3. Shutter | Slide the shutter to cover or uncover the camera lens. It is designed to protect your privacy. |
| 4. Camera light | If the light is on, the camera is in use. |
| 5. Multi-touch screen | Displays text, graphics, and videos. See “Use the multi-touch screen” on page 12. |
| 6. Wireless LAN/Bluetooth antennas | Send and receive radio waves for the wireless LAN/Bluetooth module.<br>**Note:** The antennas are not visible from the outside of the computer. |

© Copyright Lenovo 2018

## Base

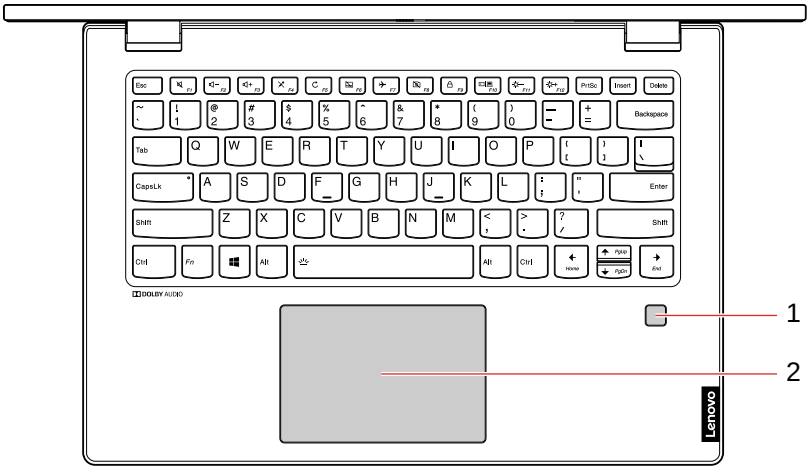


| | |
|---|---|
| 1. Fingerprint reader* | Log in to your computer with enrolled fingerprints. See “Use the fingerprint reader” on page 23. |
| 2. Touchpad | Perform finger touch and all the functions of a traditional mouse. |

* for selected models

## Left

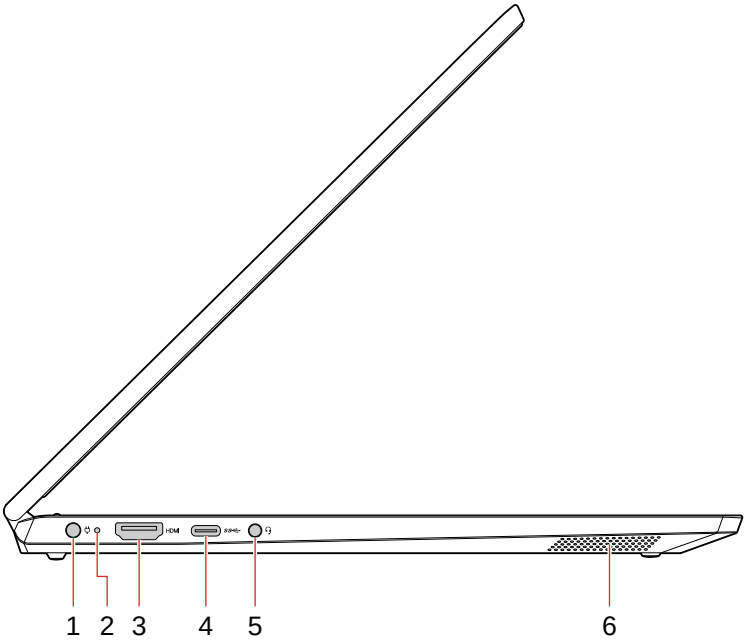


| | |
|---|---|
| 1. Power connector | Connect to ac power through an ac power adapter. |
| 2. Battery/Charging status indicator | This indicator shows whether the computer is connected to ac power.<br>• **Solid white**: Connected to ac power (battery power 91%–100%)<br>• **Solid amber**: Connected to ac power (battery power 1%–90%)<br>• **Off**: Not connected to ac power |
| 3. HDMI™ connector | Connect to a compatible digital audio device or video monitor, such as an HDTV. |
| 4. USB-C™ connector | • Charges USB-C compatible devices with the output voltage and current of 5 V and 3 A.<br>• Transfers data at USB 3.1 speed, up to 5 Gbps.<br>• Connects to USB-C accessories to expand computer functionality. To purchase USB-C accessories, go to https://www.lenovo.com/accessories<br><br>**Note:** When the battery power is below 10%, the connected USB-C accessories might not work correctly. |
| 5. Audio connector | Connect headphones or a headset with a 3.5-mm (0.14-inch) and 4-pole plug to listen to the sound from the computer.<br><br>**Note:** The audio connector does not support conventional microphones. |
| 6. Speaker | Produces sound. |

## Right

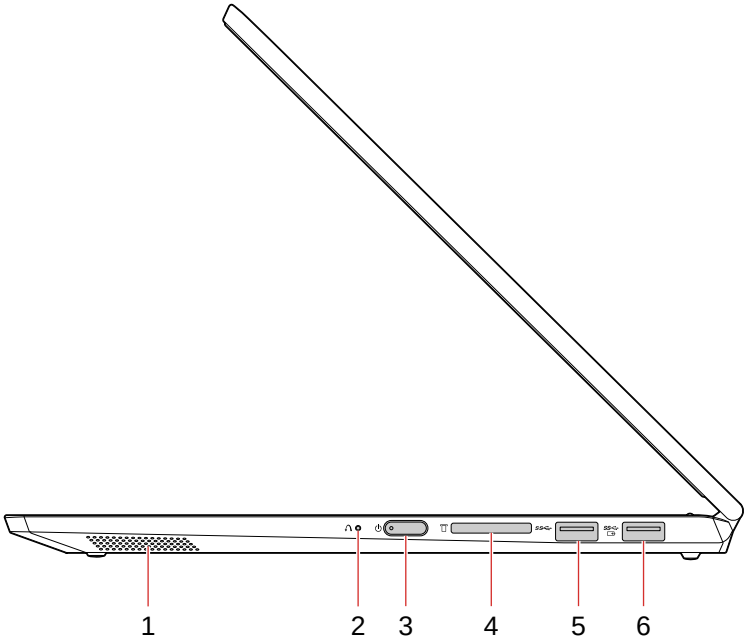


| | |
|---|---|
| 1. Speaker | Produces sound. |
| 2. Novo button | When the computer is off, press this button to start the System Recovery or the BIOS setup utility, or to enter the boot menu. |
| 3. Power button | Press to turn on the computer or put the computer to sleep mode.<br><br>To turn off the computer, open the Start menu, click ⏻ **Power**, and then select **Shut down**.<br><br>The indicator in the power button shows the system status of your computer.<br>• **Solid white/Solid amber:** The computer is on.<br>• **Off:** The computer is off or in hibernation mode.<br>• **Blinking slowly:** The computer is in sleep mode. |
| 4. Media-card slot | Insert a flash media card for data access or storage. See “Use a media card” on page 18. |
| 5. USB 3.1 connector Gen 1 | Connect a USB-compatible device, such as a USB keyboard, USB mouse, USB storage device, or USB printer. |
| 6. Always On USB 3.1 connector Gen 1 | To charge the USB-compatible devices when your computer is off, in sleep mode, or in hibernation mode, enable the Always On USB feature on your computer. See “Enable/Disable always-on” on page 26. |

## Features and specifications

| | |
|---|---|
| **Dimensions** | • Length: 328 mm (12.9 inches)<br>• Width: 229 mm (9.0 inches)<br>• Thickness: 17.9 mm (0.7 inches) |
| **Power source**(ac power adapter) | • Sine-wave input at 50 Hz to 60 Hz<br>• Input rating of the ac power adapter: 100 V to 240 V ac |
| **Battery pack** | • 45 Wh |
| **Microprocessor** | To view the microprocessor information of your computer, right-click the **Start** button and then click **System**. |
| **Memory** | • Double data rate 4 (DDR4) small outline dual in-line memory module (SODIMM)<br>• On-board memory |
| **Storage device** | • M.2 PCIE solid-state drive |
| **Display** | • Display size: 355.6 mm (14.0 inches)<br>• Display resolution: 1366 x 768 pixels or 1920 x 1080 pixels<br>• Multi-touch technology |
| **Keyboard** | • Function keys<br>• Six-row keyboard (with backlight*) |
| **Connectors and slots** | • ac power connector<br>• Audio connector<br>• Two USB 3.1 connectors Gen 1 (including one Always On USB 3.1 connector Gen 1)<br>• USB-C connector<br>• HDMI connector<br>• Media-card slot |
| **Security features** | • Fingerprint reader*<br>• Password |
| **Wireless features** | • Bluetooth<br>• Wireless LAN |
| **Others** | • Camera<br>• Microphones |

* for selected models

**Note:** The battery capacity is the typical or average capacity as measured in a specific test environment. Capacities measured in other environments may differ but are no lower than the rated capacity (see product label).

## Statement on USB transfer rate

Depending on many factors such as the processing capability of the host and peripheral devices, file attributes, and other factors related to system configuration and operating environments, the actual transfer rate using the various USB connectors on this device will vary and will be slower than the data rate listed below for each corresponding device.

| USB device | Data rate (Gbit/s) |
|---|---|
| 3.1 Gen 1 | 5 |
| 3.1 Gen 2 | 10 |
| 3.2 | 20 |

# Chapter 2. Get started with your computer

## Get started with Windows 10

Learn the basics of Windows 10 and start working with it right away. For more information about Windows 10, see the Windows help information.

## Windows account

To use the Windows operating system, a user account is required. It can either be a Windows user account or a Microsoft account.

### Windows user account

When you start Windows for the first time, you are prompted to create a Windows user account. This first account you created is of the “Administrator” type. With an Administrator account, you can create additional user accounts or change account types by doing the following:

1. Open the Start menu and select **Settings → Accounts → Family & other people**.
2. Follow the on-screen instructions.

### Microsoft account

You can also log in to the Windows operating system with a Microsoft account.

To create a Microsoft account, go to the Microsoft sign-up page at https://signup.live.com and follow the on-screen instructions.

With a Microsoft account, you can:

- Enjoy one-time signing in if you are using other Microsoft services, such as OneDrive, Skype, and Outlook.com.
- Sync personalized settings across other Windows-based devices.

© Copyright Lenovo 2018

## Windows user interface

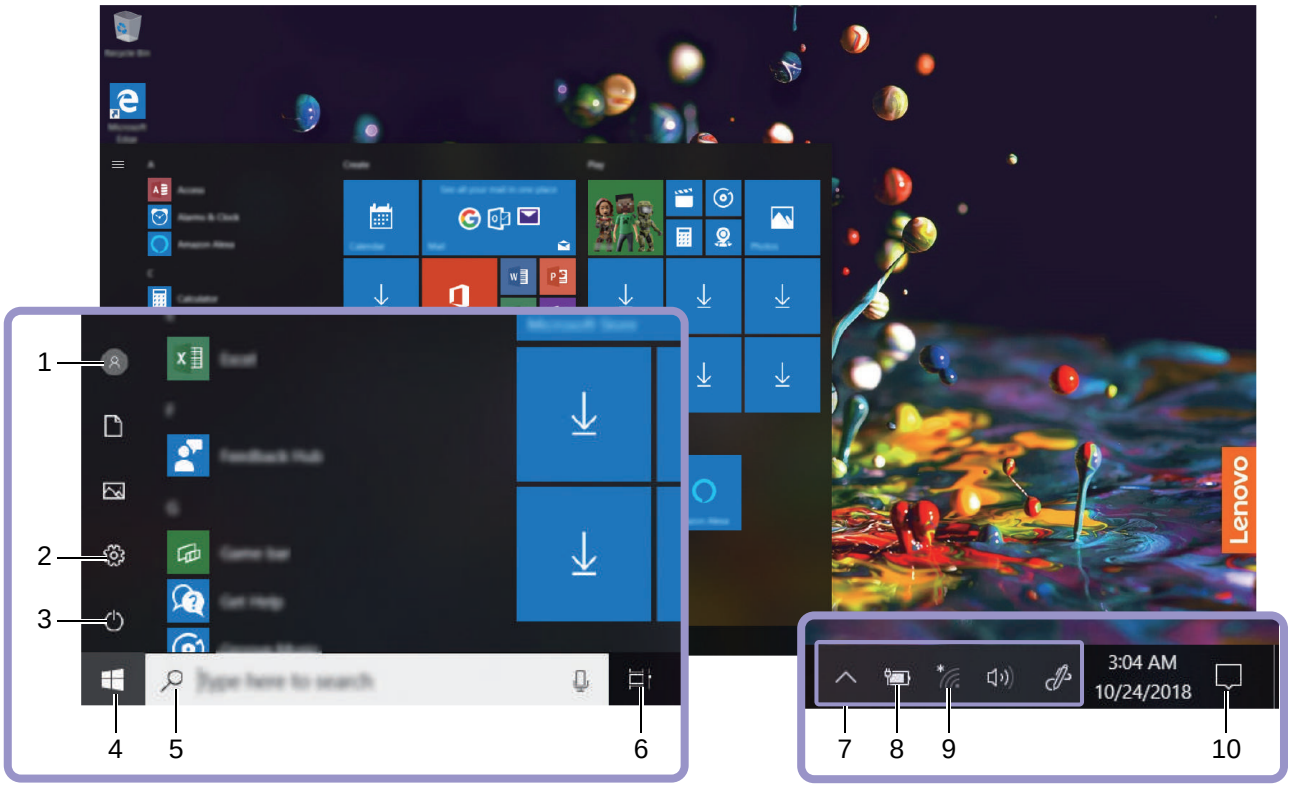


| | |
|---|---|
| 1. **Account** | Change account settings, lock the computer, or sign out from the current account. |
| 2. **Settings** | Launch Settings. |
| 3. **Power** | Shut down, restart, or put the computer into sleep. |
| 4. **Start button** | Open the Start menu. |
| 5. **Windows Search** | Type what you are looking for in the search box and get search results from your computer and the Web. |
| 6. **Task View** | Display all opened apps and switch among them. |
| 7. **Windows notification area** | Display notifications and status of some features. |
| 8. **Battery status icon** | Display power status and change battery or power settings. When your computer is not connected to ac power, the icon changes to . |
| 9. **Network icon** | Connect to an available wireless network and display the network status. |
| 10. **Action center** | Display the latest notifications from apps and provide quick access to some features. |

### Open the Start menu

- Click the **Start** button.
- Press the Windows logo key on the keyboard.

### Access Control Panel

- Open the Start menu and click **Windows System** → **Control Panel**.

- Use Windows Search.

**Launch an app**

- Open the Start menu and select the app you want to launch.
- Use Windows Search.

## Windows label

Your computer might have a Windows 10 Genuine Microsoft label affixed to its cover depending on the following factors:

- Your geographic location
- Edition of Windows 10 that is preinstalled

Go to https://www.microsoft.com/en-us/howtotell/Hardware.aspx for illustrations of the various types of Genuine Microsoft labels.

- In the People's Republic of China, the Genuine Microsoft label is required on all computer models preinstalled with any version of Windows 10.
- In other countries and regions, the Genuine Microsoft label is required only on computer models licensed for Windows 10 Pro.

The absence of a Genuine Microsoft label does not indicate that the preinstalled Windows version is not genuine. For details on how to tell whether your preinstalled Windows product is genuine, refer to the information provided by Microsoft at https://www.microsoft.com/en-us/howtotell/default.aspx

There are no external, visual indicators of the Product ID or Windows version for which the computer is licensed. Instead, the Product ID is recorded in the computer firmware. Whenever a Windows 10 product is installed, the installation program checks the computer firmware for a valid, matching Product ID to complete the activation.

In some cases, an earlier Windows version might be preinstalled under the terms of the Windows 10 Pro license downgrade rights.

# Connect to networks

Your computer helps you connect to the world through a wireless network.

1. Click the network icon in the Windows notification area. A list of available wireless networks is displayed.
2. Select a network to connect to. Provide required information if needed.

## Use Lenovo Vantage

The preinstalled Lenovo Vantage is a customized one-stop solution to help you maintain your computer with automated updates and fixes, configure hardware settings, and get personalized support.

### Access Lenovo Vantage

Open the Start menu and click **Lenovo Vantage**. You also can type `Lenovo Vantage` in the search box.

To download the latest version of Lenovo Vantage, go to Microsoft Store and search by the app name.

### Key features

Lenovo Vantage makes periodic updates of the features to keep improving your experience with your computer.

**Note:** The available features vary depending on the computer model.

- **System Update**

  Download and install firmware and driver updates to keep your computer up-to-date. You can configure the options to install updates automatically when available.
- **Hardware Settings**

  Configure intelligent settings of the following hardware to make your computer smarter to use:
  - Always On USB
  - Battery
  - Camera
  - Computer display
  - Keyboard
  - Microphone
  - Speakers
  - Touchpad
- **Health & Support**

  Monitor your computer health and get personalized support of your computer. You can:
  - Scan the computer hardware.
  - Look up computer warranty status (online).
  - Access *User Guide.*
  - Read tips and tricks articles customized for your computer.
- **Security Advisor**

  Make sure that your computer is always staying protected and safe.

## Interact with your computer

Your computer provides you various ways to navigate the screen.

## Hotkeys

Some keys on the keyboard are printed with icons. These keys are called hotkeys and can be pressed alone or in combination with the Fn key to access certain Windows functions or settings quickly. The functions of hotkeys are symbolized by the icons printed on them.

| Hotkey | Function |
|---|---|
| | Mutes/Unmutes the computer.<br><br>If you mute the computer and turn off your computer, the speakers remain muted when you turn on your computer. |
| / | Decreases/Increases volume. |
| | Enables/Disables the microphones. |
| | Refreshes the current window. |
| | Enables/Disables the touchpad. |
| | Turns on/off airplane mode. |
| | Enables/Disables the camera. |
| | Locks the current user account. |
| | Manages external displays. |
| / | Decreases/Increases display brightness. |
| **Fn + B** | Equal the Break key on a conventional external keyboard. |
| **Fn + P** | Equal the Pause key on a conventional external keyboard. |
| **Fn + S** | Equal the SysRq key on a conventional external keyboard. |
| **Fn + K** | Equal the ScrLK or Scroll Lock key on a conventional external keyboard. |
| **Fn + Q** | Switch among the three modes, auto mode, performance mode and quiet mode. |

### Hotkey mode

Some hotkeys share keys with functions keys (F1 to F12). The hotkey mode is a UEFI/BIOS setting that changes how hotkeys (or function keys) are used.

| Hotkey mode setting | How to use hotkeys | How to use function keys |
|---|---|---|
| Disabled | Hold down the Fn key and press one of the hotkeys. | Press the function keys directly. |
| Enabled | Press the hotkeys directly. | Hold down the Fn key and press one of the function keys. |

**Note:** Hotkeys that do not share keys with function keys are not affected by the hotkey mode setting. They should always be used with the Fn key.

## Use the multi-touch screen

Your computer display supports the multi-touch function. You can navigate the screen with simple touch gestures.

**Note:** Some gestures might not be available depending on the app you use.

**Tap once**

- From the Start menu: Open an app or item.
- From the desktop: Select an app or item.
- In an open app: Perform an action such as **Copy**, **Save**, and **Delete**, depending on the app.

**Tap twice quickly**

Open an app or item from the desktop.

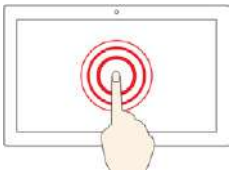

**Tap and hold**

Open a shortcut menu.

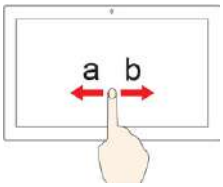


**Slide**

Scroll through items, such as lists, pages, and photos.

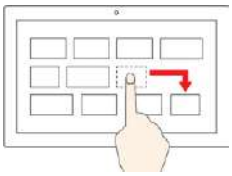

**Drag an item to the location you want**

Move an object.

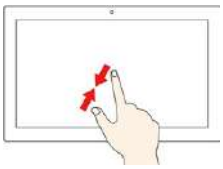

**Move two fingers closer together**

Zoom out.

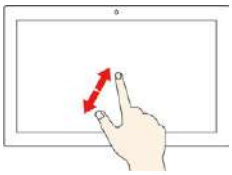

**Move two fingers farther apart**

Zoom in.

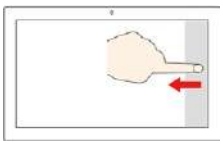

**Swipe in from the right edge**

Open the action center to see your notifications and quick actions.

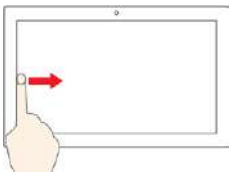

**Swipe in from the left edge**

View all your open windows in task view.

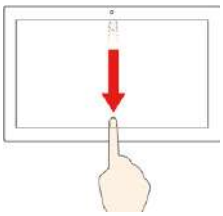

- **Swipe downwards shortly from the top edge (for full-screened app or when your computer is in the tablet mode)**

  Show a hidden title bar.
- **Swipe in from the top edge to the bottom edge (when your computer is in the tablet mode)**

  Close the current app.

### Tips

- Turn off the computer before cleaning the multi-touch screen.

- Use a dry, soft, and lint-free cloth or a piece of absorbent cotton to remove fingerprints or dust from the multi-touch screen. Do not apply solvents to the cloth.
- The multi-touch screen is a glass panel covered with a plastic film. Do not apply pressure or place any metallic object on the screen, which might damage the touch panel or cause it to malfunction.
- Do not use fingernails, gloved fingers, or inanimate objects for input on the screen.
- Regularly calibrate the accuracy of the finger input to avoid a discrepancy.

## Use multimedia

Use your computer for business or entertainment with the built-in components (camera, speakers, and audio features) or connected external devices (an external projector, monitor, and HDTV).

## Use audio

To enhance your listening experience, connect speakers, headphones, or a headset with a 3.5-mm (0.14-inch) and 4-pole plug to the audio connector.

### Change the sound settings

1. Go to Control Panel and view by category.
2. Click **Hardware and Sound** → **Sound**.
3. Change the settings as you prefer.

## Use the camera

You can use the built-in camera to take photos or record videos. The indicator next to the camera is on when the camera is in use.

To take photos or record videos:

1. Open the Start menu and click **Camera**.
2. Click the camera icon to take photos. Click the video icon to record videos.

   **Note:** To switch from photo mode to video mode, click **Switch to Video mode**.

To configure the camera settings, open the Start menu and then click **Lenovo Vantage** → **Hardware Settings** → **Audio/Visual**. Locate the **Camera** section and then follow the on-screen instructions to configure the camera settings.

## Connect to an external display

Connect your computer to a projector or a monitor to give presentations or expand your workspace.

### Connect a wired display

1. Connect the external display to an appropriate video connector on your computer, such as the HDMI connector .
2. Connect the external display to an electrical outlet.
3. Turn on the external display.

If your computer cannot detect the external display, right-click a blank area on the desktop, and then click **Display settings** → **Detect**.

### Supported resolution

Your computer supports the following video resolution, if the external display also supports that resolution.

| Connect the external display to | Supported resolution |
|---|---|
| the HDMI connector | Up to 3840 x 2160 pixels / 30 Hz |

### Connect a wireless display (for computers and external displays supporting Miracast®)

- Open the Start menu, and then click **Settings** → **Devices** → **Bluetooth & other devices** → **Add Bluetooth or other device** → **Wireless display or dock**.
- Click the action center icon in the Windows notification area and click **Connect**. Select the wireless display and follow the on-screen instructions.

### Set the display mode

Press F10 and then select a display mode of your preference.

- **PC screen only**: Displays the video output only on your computer screen.

  **Note:** Depending on the situation, you might see **Disconnect**, **PC screen only**, **Computer only**, or **Disconnect projector**.
- **Duplicate**: Displays the same video output on both your computer screen and an external display.
- **Extend**: Extends the video output from your computer display to an external display. You can drag and move items between the two displays.
- **Second screen only**: Displays the video output only on an external display.

  **Note:** Depending on the situation, you might see **Projector only** or **Second screen only**.

If you show programs using DirectDraw or Direct3D® in full-screen mode, only the main display shows the video output.

### Change display settings

1. Right-click a blank area on the desktop and select **Display settings**.
2. Select the display that you want to configure.
3. Change display settings of your preference.

You can change the settings for both the computer display and the external display. For example, you can define which one is the main display and which one is the secondary display. You also can change the resolution and orientation.

**Note:** If you set a higher resolution for the computer display than the external display, only part of the screen can be displayed on the external display.

## Operating modes

Your computer display can be rotated up to 360 degrees.

**Attention:** Do not rotate the computer display with too much force, or apply too much force to the upper-right or upper-left corner of the computer display. Otherwise the display or hinges might get damaged.

Your computer features the following four operating modes. You can switch among different modes according to your preference.

**Note:** The keyboard, the mouse and the touch pad are automatically disabled in the stand mode, tent mode, and tablet mode. Use the touch screen to control your computer instead.

**Notebook mode**

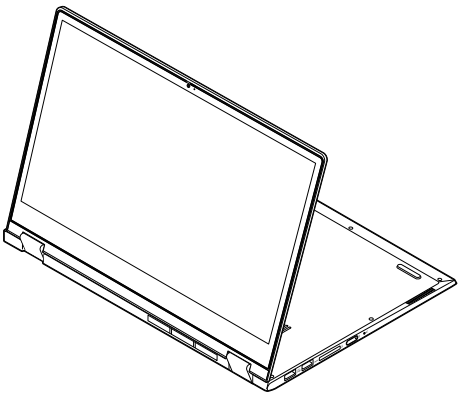

**Stand mode**

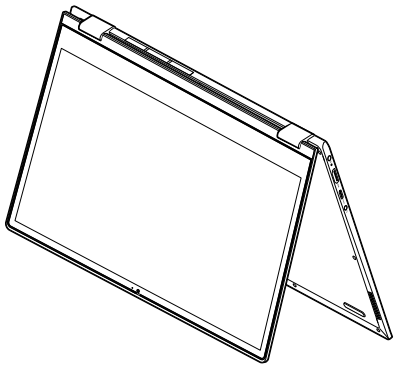

**Tent mode**

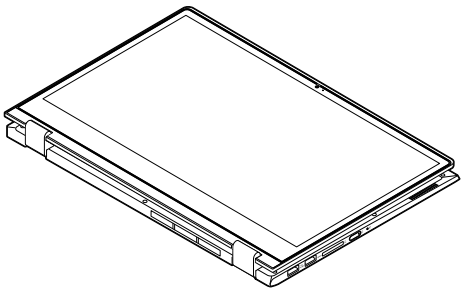

**Tablet mode**

## Lenovo Digital Pen

Selected models are equipped with Lenovo Digital Pen. The pen is not waterproof. Keep the pen away from water and excessive moisture. To purchase Lenovo Digital Pen, go to https://www.lenovo.com/accessories.

### Install the AAAA battery

Lenovo Digital Pen uses AAAA battery. The AAAA battery is provided in some countries or regions.

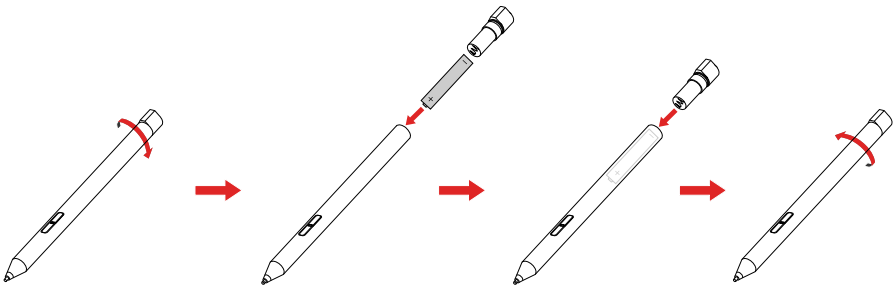

### Use Lenovo Digital Pen

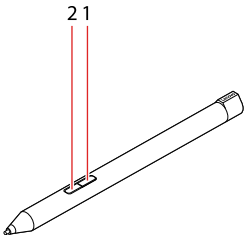


1 Eraser button

2 Click button

You can perform the following operations with the Lenovo Digital Pen:

- To click or make a selection, tap the display once.
- To double-click, tap twice without pausing.
- To right-click, tap the display and hold the pen there for one second. Alternatively, you can press and hold the click button 2 and tap the display.
- To erase ink, press and hold the eraser button 1, tap the display, and drag the pen across the ink you want to erase.

# Chapter 3. Explore your computer

## Manage power

Use the information in this section to achieve the best balance between performance and power efficiency.

### Check the battery status

The battery status icon ▭ or ⚡▭ is in the Windows notification area. You can check the battery status, view the current power plan, and access battery settings quickly.

Click the battery status icon to display the percentage of battery power remaining and change the power mode. A warning message is displayed when the battery is low.

### Charge the battery

When the battery power is low, charge your battery by connecting your computer to ac power.

The battery is fully charged in about four to eight hours. The actual charging time depends on the battery size, the physical environment, and whether you are using the computer. If the power adapter shipped with your computer supports the rapid charge function, the battery is 80% charged in about one hour.

Battery charging is also affected by its temperature. The recommended battery temperature range for charging the battery is between 10°C (50°F) and 35°C (95°F).

**Note:** To maximize the life of the battery, the computer does not start recharging the battery if the remaining power is greater than 95%.

### Check the battery temperature

1. Open the Start menu and click **Lenovo Vantage**.
2. Click **Hardware Settings** → **Power**.
3. Locate the **Power Status** section and then click **Show Details** to view the battery temperature.

### Maximize the battery life

- Lower the brightness of the computer display.
- Turn off the wireless features when not in use.
- Use the battery until the charge is depleted.
- Recharge the battery completely before using it.

### Set power button behaviors

You can define what the power button does according to your preference. For example, by pressing the power button, you can turn off the computer or put the computer to sleep or hibernation mode.

To change what the power button does:

1. Right-click the battery status icon in the Windows notification area.
2. Click **Power Options** → **Choose what the power button does**.
3. Change the settings as you prefer.

© Copyright Lenovo 2018

## Set the power plan

For ENERGY STAR® compliant computers, the following power plan takes effect when your computers have been idle for a specified duration:

*Table 1. Default power plan (when plugged into ac power)*

| |
|---|
| • Turn off the display: After 10 minutes<br>• Put the computer to sleep: After 30 minutes |

To reset the power plan to achieve the best balance between performance and power saving:

1. Right-click the battery status icon and select **Power Options**.
2. Click **Change plan setting** to choose or customize a power plan as you prefer.

# Transfer data

Quickly share your files using the built-in Bluetooth among devices with the same features. You also can insert a media card to transfer data.

## Connect a Bluetooth-enabled device

You can connect all types of Bluetooth device to your computer, such as a keyboard, a mouse, a smartphone, or speakers. The devices must be within a short distance, usually 10 meters (33 feet), from the computer.

1. Open the Start menu, and then click **Settings → Devices → Bluetooth & other devices**. Turn on the **Bluetooth** switch.
2. Click **Add Bluetooth or other device → Bluetooth**.
3. Select a Bluetooth device, and then follow the on-screen instructions.

Your Bluetooth-enabled device and computer will automatically connect the next time if the two devices are in range of each other with Bluetooth turned on. You can use Bluetooth for data transfer or remote control and communication.

## Use a media card

### Install the card

1. Locate the card slot. See “Right” on page 4.
2. Orient the metal contacts of the card to ensure that they are facing down and pointing toward the card slot.
3. Insert the card firmly into the card slot.

### Remove the card

**Attention:** Before removing a card, eject the card from the Windows operating system first. Otherwise, data on the card might get corrupted or lost.

1. Click the triangular icon in the Windows notification area to show hidden icons. Then, right-click the **Safely Remove Hardware and Eject Media** icon.
2. Select the corresponding item to eject the card from the Windows operating system.
3. Press the card and remove it from your computer. Store the card safely for future use.

## Airplane mode

When the Airplane mode is enabled, all wireless features are disabled.

To enable or disable the Airplane mode:

1. Open the Start menu.
2. Click **Settings → Network & Internet → Airplane mode**.
3. Turn on or turn off the **Airplane mode** switch.

# Chapter 4. Secure your computer and information

## Use passwords

This section introduces types of passwords in UEFI (Unified Extensible Firmware Interface) or BIOS (Basic Input/Output System) and how to set, change, and remove a password.

## Password types

You can set various passwords in the UEFI/BIOS setup utility.

| Password type | Pre-requisite | When set |
|---|---|---|
| Administrator password | No | You must enter it to start the setup utility. |
| User password | The administrator password must be set. | You can use the user password to start the setup utility. |
| Master hard disk password | No | You must enter it to start the operating system. |
| User hard disk password | The master hard disk password must be set. | You can use the user hard disk password to start the operating system. |

**Notes:**

- All passwords set in the setup utility consist of alphanumeric characters only.
- If you start the setup utility using the user password, you can only change a few settings.

## Set administrator password

You set the administrator password to prevent unauthorized access to the UEFI/BIOS setup utility.

**Attention:** If you forget the administrator password, a Lenovo authorized service personnel cannot reset your password. You must take your computer to a Lenovo authorized service personnel or a marketing representative to have the system board replaced. Proof of purchase is required and a fee will be charged for parts and service.

1. Start the UEFI/BIOS setup utility.
2. Select **Security → Set Administrator Password** and press Enter.
3. Enter a password string that contains only letters and numbers. Then, press Enter.
4. Enter the password again and press Enter.
5. Select **Exit → Exit Saving Changes**.

Next time you start the computer, you must enter the administrator password to start the setup utility. If **Power on Password** is enabled, you must enter the administrator password or the user password to start the computer.

## Change or remove administrator password

Only the administrator can change or remove the administrator password. If you remove the administrator password, the user password will also be removed.

© Copyright Lenovo 2018

1. Start the UEFI/BIOS setup utility using the administrator password.
2. Select **Security → Set Administrator Password** and press Enter.
3. Enter the current password.
4. In the **Enter New Password** text box, enter the new password.
5. In the **Confirm New Password** text box, enter the new password again.

   **Note:** If you want to remove the password, press Enter in both text boxes and do not enter any character.
6. Select **Exit → Exit Saving Changes**.

## Set user password

Before you can set up user password, the administrator password must be set.

The administrator of the setup utility might need to set up a user password for use by others.

1. Start the UEFI/BIOS setup utility using the administrator password.
2. Select **Security → Set User Password** and press Enter.
3. Enter a password string that contains only letters and numbers. Then, press Enter.

   **Note:** The user password must be different from the administrator password.
4. Enter the password again and press Enter.
5. Select **Exit → Exit Saving Changes**.

## Enable power-on password

If the administrator password has been set, you can enable power-on password to enforce greater security.

1. Start the UEFI/BIOS setup utility.
2. Select **Security → Power on Password** and press Enter.

   **Note:** The administrator password must be set in advance.
3. Change the setting to **Enabled**.
4. Select **Exit → Exit Saving Changes**.

If power-on password is enabled, a prompt appears on the screen every time you turn on the computer. You must enter the administrator or user password to start the computer.

## Set hard disk password

You can set a hard disk password in the setup utility to prevent unauthorized access to your data.

**Attention:** Be extremely careful when setting a hard disk password. If you forget the hard disk password, a Lenovo authorized service personnel cannot reset your password or recover data from the hard disk. You must take your computer to a Lenovo authorized service personnel or a marketing representative to have the hard disk drive replaced. Proof of purchase is required and a fee will be charged for parts and service.

1. Start the UEFI/BIOS setup utility.

   **Note:** If you start the setup utility using the user password, you cannot set hard disk password.
2. Select **Security → Set Hard Disk Password** and press Enter.
3. Follow on-screen instructions to set both the master and the user passwords.

**Note:** The master and user hard disk passwords must be set at the same time.

4. Select **Exit** → **Exit Saving Changes**.

If the hard disk password is set, you must provide the correct password to start the operating system.

## Change or remove hard disk password

1. Start the UEFI/BIOS setup utility.
2. Select **Security**.
3. Change or remove the hard disk password.
   - To change or remove master hard disk password, select **Change Master Password** and press Enter.

     **Note:** If you remove the master hard disk password, the user hard disk password will also be removed.
   - To change user hard disk password, select **Change User Password** and press Enter.

     **Note:** If you delete the master password, the user hard disk password will be removed together.
4. Select **Exit** → **Exit Saving Changes**.

## Use the fingerprint reader

Selected models include a fingerprint reader. You can use the reader to enroll your fingerprints. After enrolling, you can tap your finger on the fingerprint reader to log in to Windows.

### Enroll your fingerprints

Open the Start menu and then click **Settings** → **Accounts** → **Sign-in options**. Then, follow the on-screen instructions to finish the enrollment.

**Notes:**

- You need to add a Windows password before you can enroll fingerprints.
- It is recommended that you enroll more than one fingerprint in case of any injury to your fingers.

### Maintain the fingerprint reader

To ensure that the fingerprint reader works correctly, do not:

- Scratch the surface of the fingerprint reader with anything hard.
- Use or touch the reader with a wet, dirty, wrinkled, or injured finger.

## Use firewalls and antivirus programs

Your computer might be preinstalled with a firewall program. The firewall protects against computer Internet security threats, unauthorized access, intrusions, and Internet attacks. It also protects your privacy.

A full version of antivirus program is provided with a free 30-day subscription. After 30 days, you must renew the license to continue receiving the antivirus program updates.

For more information, see the help system of the program.

# Chapter 5. Configure advanced settings

This chapter provides information about UEFI/BIOS and system recovery.

## UEFI/BIOS

This section introduces what is UEFI/BIOS and the operations you can perform in UEFI/BIOS.

### What is UEFI/BIOS setup utility

UEFI/BIOS is the first program that the computer runs when the computer is turned on. UEFI/BIOS initializes the hardware components and loads the operating system and other programs. Your computer may include a setup program (setup utility) with which you can change UEFI/BIOS settings.

### Start the UEFI/BIOS setup utility

1. Press the Novo button with an expanded paper clip (or similar slender object) when your computer is off.
2. Select **BIOS Setup** from **Novo Button Menu**.

### Navigate in the UEFI/BIOS interface

You can navigate in the UEFI/BIOS interface by pressing the following keys:

| | |
|---|---|
| F1 | Displays the General Help screen. |
| F9 | Restores to the default settings. |
| F10 | Saves your configuration and exits. |
| F5 | Changes to a lower value. |
| F6 | Changes to a higher value. |
| ↑↓ | Locates an item. |
| ←→ | Selects a tab. |
| Esc | Exits the submenu and returns to the parent menu. |
| Enter | Enters the selected tab or submenu. |

### Change the startup sequence

1. Start the UEFI/BIOS setup utility.
2. Select **Boot**. The default device order list is displayed.

   **Note:** The **Boot** menu is displayed if the computer cannot start from any devices or the operating system cannot be found.
3. Set the startup sequence as desired.
4. Press F10 to save the changes and restart the computer.

To change the startup sequence temporarily:

1. Restart the computer. When the logo screen is displayed, press F12.

   **Note:** For computers with Hotkey mode enabled, press Fn + F12.

© Copyright Lenovo 2018

2. Select the device that you want the computer to start from and press Enter.

## Set the system date and time

1. Start the UEFI/BIOS setup utility.
2. Select **Configuration → System Time / System Date** and set the system date and time as desired.
3. Press F10 to save changes and exit.

## Enable/Disable hotkey mode

Step 1. Start the UEFI/BIOS setup utility.

Step 2. Select **Configuration → Hotkey Mode** and press Enter; change the setting to **Disabled** or **Enabled**.

Step 3. Select **Exit → Exit Saving Changes**.

## Enable/Disable always-on

1. Start the UEFI/BIOS setup utility.
2. Select **Configuration → Always On USB** and press Enter. Change the setting to **Disabled** or **Enabled**.
3. Select **Exit → Exit Saving Changes**.

## Update UEFI/BIOS

When you install a new program, device driver, or hardware component, you might need to update UEFI/BIOS.

Download and install the latest UEFI/BIOS update package by one of the following methods:

- From Lenovo Vantage:
  1. Open the Start menu and click **Lenovo Vantage**.
  2. Click **System Update**. In the **Lenovo System Update** section, click **Check for updates**. The available update packages are displayed and categorized by critical, recommended, or optional.
  3. If the latest UEFI/BIOS update package is available, select the package and click **Install selected**. Then, the update package will be downloaded and installed automatically.
- From the Lenovo Support Web site:

  Go to https://support.lenovo.com and select the entry for your computer. Then, follow the on-screen instructions to download and install the latest UEFI/BIOS update package.

# Recovery information

This section introduces the recovery information of the Windows 10 operating system. Ensure that you read and follow the on-screen recovery instructions. The data on your computer might be deleted during the recovery process. To avoid data loss, make a backup copy of all the data that you want to keep.

## Reset your computer

In the resetting process, you can choose to keep your files or remove them when you reinstall the operating system.

**Note:** The items in the graphical user interface (GUI) might change without notice.

1. Open the Start menu, and then click **Settings → Update & Security → Recovery**.
2. In the **Reset this PC** section, click **Get started**.

3. Follow the on-screen instructions to reset your computer.

## Use advanced options

**Note:** The items in the graphical user interface (GUI) might change without notice.

1. Open the Start menu, and then click **Settings → Update & security → Recovery**.
2. In the **Advanced startup** section, click **Restart now → Troubleshoot → Advanced options**.
3. Select a preferred option from the following list, and then follow the on-screen instructions.
   - **System Restore**: Use a restore point recorded on your PC to restore Windows
   - **Startup Repair**: Fix problems that keep Windows from loading
   - **Go back to the previous version**
   - **Command Prompt**: Use the Command Prompt for advanced troubleshooting
   - **System Image Recovery**: Recover Windows using a specific system image file
   - **UEFI Firmware Settings**: Change settings in your PC's UEFI firmware
   - **Startup Settings**: Change Windows startup behavior

## Windows automatic recovery

**Note:** Ensure that your computer is connected to ac power during the recovery process.

The Windows recovery environment on your computer operates independently from the Windows 10 operating system. It enables you to recover or repair the operating system even if the Windows 10 operating system fails to start.

After two consecutive failed boot attempts, the Windows recovery environment starts automatically. Then you can choose repair and recovery options by following the on-screen instructions.

## Create and use a recovery USB device

It is recommended that you create a recovery USB drive as early as possible as a backup for the Windows recovery programs. With the recovery USB drive, you can troubleshoot and fix the problems even if the preinstalled Windows recovery programs are damaged. If you did not create a recovery USB drive as a precautionary measure, you can contact Lenovo Customer Support Center and purchase one from Lenovo. For a list of the Lenovo Support phone numbers for your country or region, go to:

https://pcsupport.lenovo.com/supportphonelist

### Create a recovery USB drive

**Attention:** The creation process deletes anything stored on the USB drive. To avoid data loss, make a backup copy of all the data that you want to keep.

1. Ensure that your computer is connected to ac power.
2. Prepare a USB drive with at least 16 GB of storage capacity. The actual USB capacity required depends on the size of the recovery image.
3. Connect the prepared USB drive to the computer.
4. Type `recovery` in the search box. Then click **Create a recovery drive**.
5. Click **Yes** in the User Account Control window to allow the Recovery Media Creator program to start.
6. In the Recovery Drive window, follow the on-screen instructions to create a recovery USB drive.

### Use the recovery USB drive

1. Ensure that your computer is connected to ac power.
2. Connect the recovery USB drive to the computer.
3. Turn on or restart the computer. When the logo screen is displayed, press F12. The Boot Menu window opens.
4. Select the recovery USB drive as the boot device.
5. Click **Troubleshoot** to display optional recovery solutions.
6. Select a recovery solution as desired. Then follow the on-screen instructions to complete the process.

# Chapter 6. Help and support

## Frequently asked questions

| | |
|---|---|
| How do I access Control Panel? | • Open the Start menu and click **Windows System** → **Control Panel**.<br>• Use Windows search. |
| How do I turn off my computer? | Open the Start menu and click ⏻ **Power**. Then click **Shut down**. |
| How do I partition my storage drive? | https://support.lenovo.com/solutions/ht503851 |
| What do I do if my computer stops responding. | Press and hold the power button until the computer turns off. Then restart the computer. |
| What do I do if I spill liquid on the computer? | 1. Carefully unplug the ac power adapter and turn off the computer immediately. The more quickly you stop the current from passing through the computer the more likely you will reduce damage from short circuits.<br><br>**Attention:** Although you might lose some data or work by turning off the computer immediately, leaving the computer on might make your computer unusable.<br>2. Do not try to drain out the liquid by turning over the computer. If your computer has keyboard drainage holes on the bottom, the liquid will be drained out through the holes.<br>3. Wait until you are certain that all the liquid is dry before turning on your computer. |
| Where can I get the latest device drivers and UEFI/BIOS? | • From Lenovo Vantage. See “Update UEFI/BIOS” on page 26.<br>• Download from Lenovo Support Web site at https://support.lenovo.com. |

© Copyright Lenovo 2018

## Self-help resources

Use the following self-help resources to learn more about the computer and troubleshoot problems.

| Resources | How to access? |
|---|---|
| Use Lenovo Vantage to:<br>• Download and install the latest drivers and firmware.<br>• Configure hardware settings.<br>• Diagnose computer hardware problems.<br>• Check the computer warranty status.<br>• Protect you computer from malicious Wi-Fi networks. | • Open the Start menu and click **Lenovo Vantage**.<br>• Use Windows Search. |
| Product documentation:<br>• *Safety and Warranty Guide*<br>• *Setup Guide*<br>• This *User Guide*<br>• *Regulatory Notice* | 1. Go to https://support.lenovo.com.<br>2. Detect your computer or select computer model manually.<br>3. Select **Documentation** and filter out the documentation you want. |
| Lenovo Support Web site with the latest support information of the following:<br>• Drivers and software<br>• Diagnostic solutions<br>• Product and service warranty<br>• Product and parts details<br>• Knowledge base and frequently asked questions | https://support.lenovo.com |
| Windows help information | • Open the Start menu and click **Get Help** or **Tips**.<br>• Use Windows Search or the Cortana® personal assistant.<br>• Microsoft support Web site: https://support.microsoft.com |

## Call Lenovo

If you have tried to correct the problem yourself and still need help, you can call Lenovo Customer Support Center.

## Before you contact Lenovo

Prepare the following before you contact Lenovo:

1. Record the problem symptoms and details:
   - What is the problem? Is it continuous or intermittent?
   - Any error message or error code?
   - What operating system are you using? Which version?
   - Which software applications were running at the time of the problem?
   - Can the problem be reproduced? If so, how?
2. Record the system information:
   - Product name
   - Machine type and serial number

     The following illustration shows where to find the machine type and serial number of your computer.

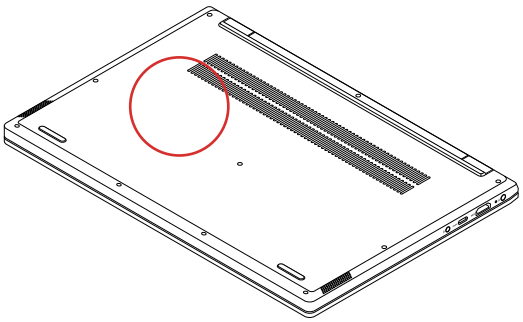

## Lenovo Customer Support Center

During the warranty period, you can call Lenovo Customer Support Center for help.

### Telephone numbers

For a list of the Lenovo Support phone numbers for your country or region:

- Go to https://pcsupport.lenovo.com/supportphonelist for the latest phone numbers.
- Refer to the *Safety and Warranty Guide* that comes with your computer.

**Note:** Phone numbers are subject to change without notice. If the number for your country or region is not provided, contact your Lenovo reseller or Lenovo marketing representative.

### Services available during the warranty period

- Problem determination - Trained personnel are available to assist you with determining if you have a hardware problem and deciding what action is necessary to fix the problem.
- Lenovo hardware repair - If the problem is determined to be caused by Lenovo hardware under warranty, trained service personnel are available to provide the applicable level of service.

- Engineering change management - Occasionally, there might be changes that are required after a product has been sold. Lenovo or your reseller, if authorized by Lenovo, will make selected Engineering Changes (ECs) that apply to your hardware available.

**Services not covered**

- Replacement or use of parts not manufactured for or by Lenovo or nonwarranted parts
- Identification of software problem sources
- Configuration of UEFI/BIOS as part of an installation or upgrade
- Changes, modifications, or upgrades to device drivers
- Installation and maintenance of network operating systems (NOS)
- Installation and maintenance of programs

For the terms and conditions of the Lenovo Limited Warranty that apply to your Lenovo hardware product, see “Warranty information” in the *Safety and Warranty Guide* that comes with your computer.

## Purchase additional services

During and after the warranty period, you can purchase additional services from Lenovo at https://www.lenovo.com/services.

Service availability and service name might vary by country or region.

# Appendix A. Important safety information

## Safety notices

This information can help you safely use your computer. Follow and retain all information included with your computer. The information in this document does not alter the terms of your purchase agreement or the Limited Warranty. For more information, see "Warranty Information" in the *Safety and Warranty Guide* that comes with your computer.

Customer safety is important. Our products are developed to be safe and effective. However, personal computers are electronic devices. Power cords, power adapters, and other features can create potential safety risks that can result in physical injury or property damage, especially if misused. To reduce these risks, follow the instructions included with your product, observe all warnings on the product and in the operating instructions, and review the information included in this document carefully. By carefully following the information contained in this document and provided with your product, you can help protect yourself from hazards and create a safer computer work environment.

**Note:** This information includes references to power adapters and batteries. In addition, some products (such as speakers and monitors) ship with external power adapters. If you have such a product, this information applies to your product. In addition, computer products contain a coin-sized internal battery that provides power to the system clock even when the computer is unplugged, so the battery safety information applies to all computer products.

## Important information about using your computer

Ensure that you follow the important tips given here to get the most use and enjoyment out of your computer. Failure to do so might lead to discomfort or injury, or cause the computer to fail.

**Protect yourself from the heat that your computer generates.**

When your computer is turned on or the battery is charging, the base, the palm rest, and some other parts may become hot. The temperature they reach depends on the amount of system activity and the level of charge in the battery.

Extended contact with your body, even through clothing, could cause discomfort or even a skin burn.

- Avoid keeping your hands, your lap, or any other part of your body in contact with a hot section of the computer for any extended time.
- Periodically take hands from using the keyboard by lifting your hands from the palm rest.

© Copyright Lenovo 2018

**Protect yourself from the heat generated by the ac power adapter.**

When the ac power adapter is connected to an electrical outlet and your computer, it generates heat.

Extended contact with your body, even through clothing, may cause a skin burn.

- Do not place the ac power adapter in contact with any part of your body while it is in use.
- Never use it to warm your body.
- Do not wrap the cords around the ac power adapter while in use.

**Prevent your computer from getting wet.**

To avoid spills and the danger of electrical shock, keep liquids away from your computer.

**Protect the cables from being damaged.**

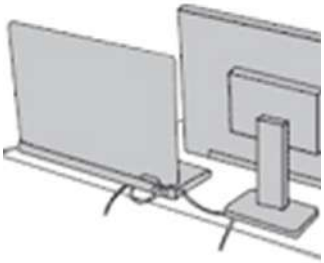

Applying strong force to cables may damage or break them.

Route communication lines, or the cables of an ac power adapter, a mouse, a keyboard, a printer, or any other electronic device, so that they cannot be walked on, tripped over, pinched by your computer or other objects, or in any way subject to treatment that could interfere with the operation of your computer.

**Protect your computer and data when moving it.**

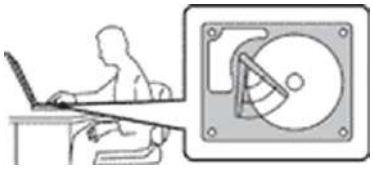

Before moving a computer equipped with a hard disk drive, do one of the following:

- Turn it off.
- Put it in sleep mode.
- Put it in hibernation mode.

This helps to prevent damage to the computer, and possible loss of data.

**Handle your computer gently.**

Do not drop, bump, scratch, twist, hit, vibrate, push, or place heavy objects on your computer, display, or external devices.

**Carry your computer carefully.**

- Use a quality carrying case that provides adequate cushioning and protection.
- Do not pack your computer in a tightly packed suitcase or bag.
- Before putting your computer in a carrying case, make sure that it is off, in sleep mode, or in hibernation mode. Do not put a computer in a carrying case while it is turned on.

## Conditions that require immediate action

**Products can become damaged due to misuse or neglect. Some product damage is serious enough that the product should not be used again until it has been inspected and, if necessary, repaired by an authorized servicer.**

**As with any electronic device, pay close attention to the product when it is turned on.**

**On very rare occasions, you might notice an odor or see a puff of smoke or sparks vent from your product. Or you might hear sounds like popping, cracking, or hissing. These might merely mean that an internal electronic component has failed in a safe and controlled manner. Or, they might indicate a potential safety issue. Do not take risks or attempt to diagnose the situation yourself. Contact the Customer Support Center for further guidance. For a list of Service and Support phone numbers, see the following Web site:**

**https://pcsupport.lenovo.com/supportphonelist**

**Frequently inspect your computer and its components for damage or wear or signs of danger. If you have any question about the condition of a component, do not use the product. Contact the Customer Support Center or the product manufacturer for instructions on how to inspect the product and have it repaired, if necessary.**

**In the unlikely event that you notice any of the following conditions, or if you have any safety concerns with your product, stop using the product and unplug it from the power source and telecommunication lines until you can speak to the Customer Support Center for further guidance.**

- Power cords, plugs, power adapters, extension cords, surge protectors, or power supplies that are cracked, broken, or damaged.
- Signs of overheating, smoke, sparks, or fire.
- Damage to a battery (such as cracks, dents, or creases), discharge from a battery, or a buildup of foreign substances on the battery.
- A cracking, hissing, or popping sound, or strong odor that comes from the product.
- Signs that liquid has been spilled or an object has fallen onto the computer product, the power cord, or power adapter.
- The computer product, power cord, or power adapter has been exposed to water.
- The product has been dropped or damaged in any way.
- The product does not operate normally when you follow the operating instructions.

**Note:** If you notice these conditions with a product (such as an extension cord) that is not manufactured for or by Lenovo, stop using that product until you can contact the product manufacturer for further instructions, or until you get a suitable replacement.

## Service and upgrades

Do not attempt to service a product yourself unless instructed to do so by the Customer Support Center or your documentation. Only use a Service Provider who is approved to repair your particular product.

**Note:** Some computer parts can be upgraded or replaced by the customer. Upgrades typically are referred to as options. Replacement parts approved for customer installation are referred to as Customer Replaceable Units, or CRUs. Lenovo provides documentation with instructions when it is appropriate for customers to install options or replace CRUs. You must closely follow all instructions when installing or replacing parts. The Off state of a power indicator does not necessarily mean that voltage levels inside a product are zero. Before you remove the covers from a product equipped with a power cord, always ensure that the power is turned off and that the product is unplugged from any power source. If you have any questions or concerns, contact the Customer Support Center.

Although there are no moving parts in your computer after the power cord has been disconnected, the following warnings are required for your safety.

Keep fingers and other parts of your body away from hazardous, moving parts. If you suffer an injury, seek medical care immediately.

Avoid contact with hot components inside the computer. During operation, some components become hot enough to burn the skin. Before you open the computer cover, turn off the computer, disconnect power, and wait approximately 10 minutes for the components to cool.

After replacing a CRU, reinstall all protective covers, including the computer cover, before connecting power and operating the computer. This action is important to help prevent unexpected electrical shock and help ensure the containment of an unexpected fire that could happen under extremely rare conditions.

When replacing CRUs, be cautious of sharp edges or corners that might cause injury. If you suffer an injury, seek medical care immediately.

## Power cords and power adapters

**DANGER**

**Use only the power cords and power adapters supplied by the product manufacturer.**

**The power cords shall be safety approved. For Germany, it shall be H03VV-F, 3G, 0.75 $mm^2$, or better. For other countries, the suitable types shall be used accordingly.**

**Never wrap a power cord around a power adapter or other object. Doing so can stress the cord in ways that can cause the cord to fray, crack, or crimp. This can present a safety hazard.**

**Always route power cords so that they will not be walked on, tripped over, or pinched by objects.**

**Protect power cords and power adapters from liquids. For instance, do not leave your power cord or power adapter near sinks, tubs, toilets, or on floors that are cleaned with liquid cleansers. Liquids can cause a short circuit, particularly if the power cord or power adapter has been stressed by misuse. Liquids also can cause gradual corrosion of power cord terminals and/or the connector terminals on a power adapter, which can eventually result in overheating.**

**Ensure that all power cord connectors are securely and completely plugged into receptacles.**

**Do not use any power adapter that shows corrosion at the ac input pins or shows signs of overheating (such as deformed plastic) at the ac input pins or anywhere on the power adapter.**

**Do not use any power cords where the electrical contacts on either end show signs of corrosion or overheating or where the power cord appears to have been damaged in any way.**

**To prevent possible overheating, do not cover the power adapter with clothing or other objects when the power adapter is plugged into an electrical outlet.**

## Extension cords and related devices

Ensure that extension cords, surge protectors, uninterruptible power supplies, and power strips that you use are rated to handle the electrical requirements of the product. Never overload these devices. If power strips are used, the load should not exceed the power strip input rating. Consult an electrician for more information if you have questions about power loads, power requirements, and input ratings.

## Plugs and outlets

**DANGER**

**If a receptacle (power outlet) that you intend to use with your computer equipment appears to be damaged or corroded, do not use the outlet until it is replaced by a qualified electrician.**

**Do not bend or modify the plug. If the plug is damaged, contact the manufacturer to obtain a replacement.**

**Do not share an electrical outlet with other home or commercial appliances that draw large amounts of electricity; otherwise, unstable voltage might damage your computer, data, or attached devices.**

**Some products are equipped with a three-pronged plug. This plug fits only into a grounded electrical outlet. This is a safety feature. Do not defeat this safety feature by trying to insert it into a non-grounded outlet. If you cannot insert the plug into the outlet, contact an electrician for an approved outlet adapter or to replace the outlet with one that enables this safety feature. Never overload an electrical outlet. The overall system load should not exceed 80 percent of the branch circuit rating. Consult an electrician for more information if you have questions about power loads and branch circuit ratings.**

**Be sure that the power outlet you are using is properly wired, easily accessible, and located close to the equipment. Do not fully extend power cords in a way that will stress the cords.**

**Be sure that the power outlet provides the correct voltage and current for the product you are installing.**

**Carefully connect and disconnect the equipment from the electrical outlet.**

## Power supply statement

Never remove the cover on a power supply or any part that has the following label attached.

Hazardous voltage, current, and energy levels are present inside any component that has this label attached. There are no serviceable parts inside these components. If you suspect a problem with one of these parts, contact a service technician.

## External devices

**CAUTION:**
**Do not connect or disconnect any external device cables other than Universal Serial Bus (USB) and 1394 cables while the computer power is on; otherwise, you might damage your computer. To avoid possible damage to attached devices, wait at least five seconds after the computer is shut down to disconnect external devices.**

## General battery notice

**DANGER**

**Batteries supplied by Lenovo for use with your product have been tested for compatibility and should only be replaced with approved parts. A battery other than the one specified by Lenovo, or a disassembled or modified battery is not covered by the warranty.**

**Battery abuse or mishandling can cause overheat, liquid leakage, or an explosion. To avoid possible injury, do the following:**

- **Do not open, dissemble, or service any battery.**
- **Do not crush or puncture the battery.**
- **Do not short-circuit the battery, or expose it to water or other liquids.**
- **Keep the battery away from children.**
- **Keep the battery away from fire.**

**Stop using the battery if it is damaged, or if you notice any discharge or the buildup of foreign materials on the battery leads.**

**Store the rechargeable batteries or products containing the rechargeable batteries at room temperature, charged to approximately 30 to 50% of capacity. We recommend that the batteries be charged about once per year to prevent overdischarge.**

**Do not put the battery in trash that is disposed of in landfills. When disposing of the battery, comply with local ordinances or regulations.**

## Notice for removable rechargeable battery

**DANGER**

**Only recharge the battery strictly according to instructions included in the product documentation.**

**If the battery is incorrectly replaced, there is danger of an explosion. The battery contains a small amount of harmful substances.**

## Notice for built-in rechargeable battery

**DANGER**

**Do not attempt to remove or replace the built-in rechargeable battery. Replacement of the battery must be done by a Lenovo-authorized repair facility or technician.**

**Only recharge the battery strictly according to instructions included in the product documentation.**

**The Lenovo-authorized repair facilities or technicians recycle Lenovo batteries according to local laws and regulations.**

## Lithium coin-cell battery notice

**DANGER**

**Danger of explosion if battery is incorrectly replaced.**

**If the coin-cell battery is not a CRU, do not attempt to replace the coin-cell battery. Replacement of the battery must be done by a Lenovo-authorized repair facility or technician.**

**The Lenovo-authorized repair facilities or technicians recycle Lenovo batteries according to local laws and regulations.**

When replacing the lithium coin-cell battery, use only the same type or equivalent type that is recommended by the manufacturer. The battery contains lithium and can explode if not properly used, handled, or disposed of. Swallowing the lithium coin-cell battery will cause chocking or severe internal burns in just two hours and might even result in death.

Keep batteries away from children. If the lithium coin-cell battery is swallowed or placed inside any part of the body, seek medical care immediately.

**Do not:**

- Throw or immerse into water
- Heat to more than 100 °C (212°F).
- Repair or disassemble
- Leave in an extremely low air pressure environment
- Leave in an extremely high-temperature environment
- Crush, puncture, cut, or incinerate

Dispose of the battery as required by local ordinances or regulations.

The following statement applies to users in the state of California, U.S.A.

California Perchlorate Information:

Products containing manganese dioxide lithium coin-cell batteries may contain perchlorate.

Perchlorate Material - special handling may apply, see https://www.dtsc.ca.gov/hazardouswaste/perchlorate/.

## Heat and product ventilation

**DANGER**

**Computers, ac power adapters, and many accessories can generate heat when turned on and when batteries are charging. Notebook computers can generate a significant amount of heat due to their compact size. Always follow these basic precautions:**

- **When your computer is turned on or the battery is charging, the base, the palm rest, and some other parts may become hot. Avoid keeping your hands, your lap, or any other part of your body in contact with a hot section of the computer for any extended length of time. When you use the keyboard, avoid keeping your palms on the palm rest for a prolonged period of time. Your computer generates some heat during normal operation. The amount of heat depends on the amount of system activity and the battery charge level. Extended contact with your body, even through clothing, could cause discomfort or even a skin burn. Periodically take breaks from using the keyboard by lifting your hands from the palm rest; and be careful not to use the keyboard for any extended length of time.**
- **Do not operate your computer or charge the battery near flammable materials or in explosive environments.**
- **Ventilation slots, fans and/or heat sinks are provided with the product for safety, comfort, and reliable operation. These features might inadvertently become blocked by placing the product on a bed, sofa, carpet, or other flexible surface. Never block, cover, or disable these features.**
- **When the ac power adapter is connected to an electrical outlet and your computer, it generates heat. Do not place the adapter in contact with any part of your body while using it. Never use the ac power adapter to warm your body. Extended contact with your body, even through clothing, may cause a skin burn.**

**For your safety, always follow these basic precautions with your computer:**

- **Keep the cover closed whenever the computer is plugged in.**
- **Regularly inspect the outside of the computer for dust accumulation.**
- **Remove dust from vents and any perforations in the bezel. More frequent cleanings might be required for computers in dusty or high-traffic areas.**
- **Do not restrict or block any ventilation openings.**
- **Do not operate your computer inside furniture, as this might increase the risk of overheating.**
- **Airflow temperatures into the computer should not exceed 35°C (95°F).**

## Electrical current safety information

**DANGER**

**Electric current from power, telephone, and communication cables is hazardous.**

**To avoid a shock hazard:**

- **Do not use your computer during a lightning storm.**
- **Do not connect or disconnect any cables or perform installation, maintenance, or reconfiguration of this product during an electrical storm.**
- **Connect all power cords to a properly wired and grounded electrical outlet.**
- **Connect properly wired outlets to any equipment that will be attached to this product.**
- **Whenever possible, use one hand only to connect or disconnect signal cables.**
- **Never turn on any equipment when there is evidence of fire, water, or structural damage.**
- **Disconnect the attached power cords, battery, and all the cables before you open the device covers, unless instructed otherwise in the installation and configuration procedures.**
- **Do not use your computer until all internal parts enclosures are fastened into place. Never use the computer when internal parts and circuits are exposed.**

**DANGER**

**Connect and disconnect cables as described in the following procedures when installing, moving, or opening covers on this product or attached devices.**

**To connect:**

1. **Turn everything OFF.**
2. **First, attach all cables to devices.**
3. **Attach signal cables to connectors.**
4. **Attach power cords to outlets.**
5. **Turn devices ON.**

**To disconnect:**

1. **Turn everything OFF.**
2. **First, remove power cords from outlets.**
3. **Remove signal cables from connectors.**
4. **Remove all cables from devices.**

The power cord must be disconnected from the wall outlet or receptacle before installing all other electrical cables connected to the computer.

The power cord may be reconnected to the wall outlet or receptacle only after all other electrical cables have been connected to the computer.

**DANGER**

**During electrical storms, do not perform any replacement and do not connect the telephone cable to or disconnect it from the telephone outlet on the wall.**

## Laser safety information

**CAUTION:**
**When laser products (such as CD-ROMs, DVD drives, fiber optic devices, or transmitters) are installed, note the following:**

- **Do not remove the covers. Removing the covers of the laser product could result in exposure to hazardous laser radiation. There are no serviceable parts inside the device.**
- **Use of controls or adjustments or performance of procedures other than those specified herein might result in hazardous radiation exposure.**

**DANGER**

**Some laser products contain an embedded Class 3B laser diode. Note the following:**
**Laser radiation when open. Do not stare into the beam, do not view directly with optical instruments, and avoid direct exposure to the beam.**

## Liquid crystal display (LCD) notice

**CAUTION:**
**The liquid crystal display (LCD) is made of glass, and rough handling or dropping the computer can cause the LCD to break. If the LCD breaks and the internal fluid gets into your eyes or on your hands, immediately wash the affected areas with water for at least 15 minutes; if any symptoms are present after washing, get medical care.**

**Note:** For products with mercury-containing fluorescent lamps (for example, non-LED), the fluorescent lamp in the liquid crystal display (LCD) contains mercury; dispose of according to local, state, or federal laws.

## Using headphones or earphones

Excessive sound pressure from earphones and headphones can cause hearing loss. Adjustment of the equalizer to maximum increases the earphone and headphone output voltage and the sound pressure level. Therefore, to protect your hearing, adjust the equalizer to an appropriate level.

Excessive use of headphones or earphones for a long period of time at high volume can be dangerous if the output of the headphone or earphone connectors do not comply with specifications of EN 50332-2. The headphone output connector of your computer complies with EN 50332-2 Sub clause 7. This specification limits the computer's maximum wide band true RMS output voltage to 150 mV. To help protect against hearing loss, ensure that the headphones or earphones you use also comply with EN 50332-2 (Clause 7 limits) for a wide band characteristic voltage of 75 mV. Using headphones that do not comply with EN 50332-2 can be dangerous due to excessive sound pressure levels.

If your Lenovo computer came with headphones or earphones in the package, as a set, the combination of the headphones or earphones and the computer already complies with the specifications of EN 50332-1. If different headphones or earphones are used, ensure that they comply with EN 50332-1 (Clause 6.5 Limitation Values). Using headphones that do not comply with EN 50332-1 can be dangerous due to excessive sound pressure levels.

## Choking hazard notice

CHOKING HAZARD – Product contains small parts.

Keep away from children under three years.

## Plastic bag notice

**DANGER**

**Plastic bags can be dangerous. Keep plastic bags away from babies and children to avoid danger of suffocation.**

## Glass parts notice

**CAUTION:**
**Some parts of your product may be made of glass. This glass could break if the product is dropped on a hard surface or receives a substantial impact. If glass breaks, do not touch or attempt to remove it. Stop using your product until the glass is replaced by trained service personnel.**

## Static electricity prevention

Static electricity, although harmless to you, can seriously damage computer components and options. Improper handling of static-sensitive parts can damage the part. When you unpack an option or CRU, do not open the static-protective package containing the part until the instructions direct you to install it.

When you handle options or CRUs, or perform any work inside the computer, take the following precautions to avoid static-electricity damage:

- Limit your movement. Movement can cause static electricity to build up around you.
- Always handle components carefully. Handle adapters, memory modules, and other circuit boards by the edges. Never touch exposed circuitry.
- Prevent others from touching components.
- When you install a static-sensitive option or CRU, touch the static-protective package containing the part to a metal expansion-slot cover or other unpainted metal surface on the computer for at least two seconds. This reduces static electricity in the package and your body.
- When possible, remove the static-sensitive part from the static-protective packaging and install the part without setting it down. When this is not possible, place the static-protective packaging on a smooth, level surface and place the part on it.
- Do not place the part on the computer cover or other metal surface.

## Operating environment

### Maximum altitude (without pressurization)

3048 m (10 000 ft)

### Temperature

- At altitudes up to 2438 m (8000 ft)
  - Operating: 5°C to 35°C (41°F to 95°F)
  - Storage: 5°C to 43°C (41°F to 109°F)
- At altitudes above 2438 m (8000 ft)
  - Maximum temperature when operating under the unpressurized condition: 31.3°C (88°F)

  **Note:** When you charge the battery, its temperature must be no lower than 10°C (50°F).

### Relative humidity

- Operating: 8% to 95% at wet-bulb temperature 23°C (73°F)
- Storage: 5% to 95% at wet-bulb temperature 27°C (81°F)

## Cleaning and maintenance

With appropriate care and maintenance your computer will serve you reliably. The following topics offer information to help you keep your computer in top working order.

### Basic maintenance tips

Here are some basic points about keeping your computer functioning properly:

- If possible, place your computer in a well-ventilated and dry area without direct exposure to sunshine.
- Store packing materials safely out of the reach of children to prevent the risk of suffocation from plastic bags.
- Keep your computer away from magnets, activated cellular phones, electrical appliances, or speakers (more than 13 cm or 5 inches).
- Avoid subjecting your computer to extreme temperatures (below 5°C/41°F or above 35°C/95°F).
- Avoid placing any objects (including paper) between the display and the keyboard or the palm rest.
- Computer display might be designed to be opened and used at a certain angle. Do not open the display with force. Otherwise, the computer hinge might get damaged.
- Do not turn your computer over when the ac power adapter is plugged in, otherwise, it could break the adapter plug.
- Before moving your computer, be sure to remove any media, turn off attached devices, and disconnect cords and cables.
- When picking up your open computer, hold it by the bottom. Do not pick up or hold your computer by the display.
- Only an authorized Lenovo repair technician should disassemble and repair your computer.
- Do not modify or tape the latches to keep the display open or closed.
- Avoid directly exposing your computer and peripherals to the air from an appliance that can produce negative ions. Wherever possible, ground your computer to facilitate safe electrostatic discharge.

### Cleaning your computer

It is a good practice to clean your computer periodically to protect the surfaces and ensure trouble-free operation.

**Cleaning the computer cover**: Wipe it with a lint-free cloth dampened in mild soap and water. Avoid applying liquids directly to the cover.

**Cleaning the keyboard**: Wipe the keys one by one with a lint-free cloth dampened in mild soap and water. If you wipe several keys at a time, the cloth might hook onto an adjacent key and possibly damage it. Avoid spraying cleaner directly onto the keyboard. To remove any crumbs or dust from beneath the keys, you can use a camera blower with a brush or use cool air from a hair dryer.

**Cleaning the computer screen**: Scratches, oil, dust, chemicals, and ultraviolet light can affect the performance of your computer screen. Use a dry, soft lint-free cloth to wipe the screen gently. If you see a scratchlike mark on your screen, it might be a stain. Wipe or dust the stain gently with a soft, dry cloth. If the stain remains, moisten a soft, lint-free cloth with water or eyeglass cleaner, but do not apply liquids directly to your computer screen. Ensure that the computer screen is dry before closing it.

# Appendix B. Accessibility and ergonomic information

This chapter provides information about accessibility and ergonomics.

## Accessibility information

Lenovo is committed to providing users who have hearing, vision, and mobility limitations with greater access to information and technology. This section provides information about the ways these users can get the most out of their computer experience. You also can get the most up-to-date accessibility information from the following Web site:

https://www.lenovo.com/accessibility

### Keyboard shortcuts

The following list contains keyboard shortcuts that can help make your computer easier to use.

**Note:** Depending on your keyboard, some of the following keyboard shortcuts might not be available.

- **Windows logo key + U**: Open Ease of Access Center
- **Right Shift for eight seconds**: Turn on or turn off Filter Keys
- **Shift five times**: Turn on or turn off Sticky Keys
- **Left Alt+Left Shift+PrtSn**: Turn on or turn off High Contrast

For more information, go to https://windows.microsoft.com/, and then search using any of the following keywords: `keyboard shortcuts`, `key combinations`, `shortcut keys`.

### Ease of Access Center

Ease of Access Center on the Windows operating system enables you to configure your computers to suit their physical and cognitive needs.

To access Ease of Access Center:

1. Go to Control Panel and view by Category.
2. Click **Ease of Access → Ease of Access Center**.
3. Choose the appropriate tool by following the on-screen instructions.

Ease of Access Center mainly includes the following tools:

- Magnifier

  Magnifier is a useful utility that enlarges the entire screen or part of the screen so that you can see the items better.
- Narrator

  Narrator is a screen reader that reads what is displayed on the screen aloud and describes events such as error messages.
- On-Screen Keyboard

  If you prefer to type or enter data into your computer using a mouse, joystick, or other pointing device instead of a physical keyboard, you can use On-Screen Keyboard. On-Screen Keyboard displays a visual keyboard with all the standard keys. You can select keys using the mouse or another pointing device, or you can tap to select the keys if your computer supports multi-touch screen.

© Copyright Lenovo 2018

- High Contrast

  High Contrast is a feature that heightens the color contrast of some text and images on your screen. As a result, those items are more distinct and easier to identify.
- Personalized keyboard

  Adjust keyboard settings to make your keyboard easier to use. For example, you can use your keyboard to control the pointer and make the keyboard easier to type certain key combinations.
- Personalized mouse

  Adjust mouse settings to make your mouse easier to use. For example, you can change the pointer appearance and make your mouse easier to manage windows.

### Speech Recognition

Speech Recognition enables you to control your computer by voice.

You can use verbal instructions to control the keyboard and mouse. With verbal instructions, you can start programs, open menus, click objects on the screen, dictate text into documents, and write and send e-mails.

To use Speech Recognition:

1. Go to Control Panel and view by Category.
2. Click **Ease of Access → Speech Recognition**.
3. Follow the on-screen instructions.

### Screen-reader technologies

Screen-reader technologies are primarily focused on software program interfaces, help systems, and various online documents. For additional information about screen readers, see the following:

- Using PDFs with screen readers:

  https://www.adobe.com/accessibility.html?promoid=DJGVE
- Using the JAWS screen reader:

  https://www.freedomscientific.com/Products/Blindness/JAWS
- Using the NVDA screen reader:

  https://www.nvaccess.org/

### Screen resolution

You can make the text and images on your screen easier to read by adjusting the screen resolution of your computer.

To adjust the screen resolution:

1. Right-click a blank area on the desktop and then click **Display settings → Display**.
2. Follow the on-screen instructions.

**Note:** Setting a resolution too low might prevent some items from fitting on the screen.

### Customizable item size

You can make the items on your screen easier to read by changing the item size.

- To change the item size temporarily, use the Magnifier tool in Ease of Access Center.
- To change the item size permanently:
  - Change the size of all the items on your screen.

1. Right-click a blank area on the desktop and then click **Display settings → Display**.
2. Change the item size by following the on-screen instructions. For some applications, your configuration might not take effect until you sign out and then sign in again.

– Change the size of the items on a Web page.

  Press and hold Ctrl, and then press the plus-sign key (+) to enlarge or the minus-sign key (–) to reduce the text size.

– Change the size of the items on the desktop or a window.

  **Note:** This function might not work on some windows.

  If your mouse has a wheel, press and hold Ctrl, and then scroll the wheel to change the item size.

### Industry-standard connectors

Your computer provides industry-standard connectors that enable you to connect assistive devices.

### Documentation in accessible formats

Lenovo provides electronic documentation in accessible formats, such as properly tagged PDF files or HyperText Markup Language (HTML) files. Lenovo electronic documentation is developed to ensure that visually impaired users can read the documentation through a screen reader. Each image in the documentation also includes adequate alternative text so that visually impaired users can understand the image when they use a screen reader.

## Ergonomic information

Good ergonomic practice is important to get the most from your personal computer and to avoid discomfort. Arrange your workplace and the equipment you use to suit your individual needs and the kind of work that you perform. In addition, use healthy work habits to maximize your performance and comfort when using your computer.

Working in the virtual office might mean adapting to frequent changes in your environment. Adapting to the surrounding light sources, active seating, and the placement of your computer hardware, can help you improve your performance and achieve greater comfort.

This example shows someone in a conventional setting. Even when not in such a setting, you can follow many of these tips. Develop good habits, and they will serve you well.

**General posture**: Make minor modifications in your working posture to deter the onset of discomfort caused by long periods of working in the same position. Frequent short breaks from your work also help to prevent minor discomfort associated with your working posture.

**Display**: Position the display to maintain a comfortable viewing distance of 510 mm to 760 mm (20 inches to 30 inches). Avoid glare or reflections on the display from overhead lighting or outside sources of light. Keep

the display screen clean and set the brightness to levels that enable you to see the screen clearly. Press the brightness control keys to adjust display brightness.

**Head position**: Keep your head and neck in a comfortable and neutral (vertical, or upright) position.

**Chair**: Use a chair that gives you good back support and seat height adjustment. Use chair adjustments to best suit your comfort posture.

**Arm and hand position**: If available, use chair arm rests or an area on your working surface to provide weight support for your arms. Keep your forearms, wrists, and hands in a relaxed and neutral (horizontal) position. Type with a soft touch without pounding the keys.

**Leg position**: Keep your thighs parallel to the floor and your feet flat on the floor or on a footrest.

### What if you are traveling?

It might not be possible to observe the best ergonomic practices when you are using your computer while on the move or in a casual setting. Regardless of the setting, try to observe as many of the tips as possible. Sitting properly and using adequate lighting, for example, helps you maintain desirable levels of comfort and performance. If your work area is not in an office setting, ensure to take special note of employing active sitting and taking work breaks. Many product solutions are available to help you modify and expand your computer to best suit your needs. You can find some of these options at https://www.lenovo.com/accessories. Explore your options for docking solutions and external products that provide the adjustability and features that you want.

### Questions about vision?

The visual display screens of notebook computers are designed to meet the highest standards. These visual display screens provide you with clear, crisp images and large, bright displays that are easy to see, yet easy on the eyes. Any concentrated and sustained visual activity can be tiring. If you have questions on eye fatigue or visual discomfort, consult a vision-care specialist for advice.

# Appendix C. Compliance information

This chapter provides regulatory, environmental, RoHS, and ENERGY STAR information about Lenovo products.

## Radio frequency compliance statements

Computer models equipped with wireless communications comply with the radio frequency and safety standards of any country or region in which it has been approved for wireless use.

Besides this document, ensure that you read the *Regulatory Notice* for your country or region before using the wireless devices contained in your computer.

## European Union — compliance with the Radio Equipment Directive

This product is in conformity with all the requirements and essential norms that apply to EU Council Radio Equipment Directive 2014/53/EU on the approximation of the laws of the Member States relating to radio equipment. The full text of the system EU declaration of conformity and the EU wireless module declarations are available at the following Internet addresses:

- For notebook computers: https://www.lenovo.com/us/en/social_responsibility/EU_DoC_notebooks
- For tablet computers: https://www.lenovo.com/us/en/social_responsibility/EU_DoC_notebooks
- For wireless peripheral devices: https://www.lenovo.com/us/en/social_responsibility/EU_DoC_wireless_options

Lenovo cannot accept responsibility for any failure to satisfy the protection requirements resulting from a non-recommended modification of the product, including the installation of option cards from other manufacturers. This product has been tested and found to comply with the limits for Class B equipment according to European Standards harmonized in the Directives in compliance. The limits for Class B equipment were derived for typical residential environments to provide reasonable protection against interference with licensed communication devices.

## Brazil

Este equipamento não tem direito à proteção contra interferência prejudicial e não pode causar interferência em sistemas devidamente autorizados.

This equipment is not protected against harmful interference and may not cause interference with duly authorized systems.

## Mexico

**Advertencia**: En Mexico la operación de este equipo está sujeta a las siguientes dos condiciones: (1) es posible que este equipo o dispositivo no cause interferencia perjudicial y (2) este equipo o dispositivo debe aceptar cualquier interferencia, incluyendo la que pueda causar su operación no deseada.

© Copyright Lenovo 2018

## Singapore

Complies with
IMDA Standards
DB102306

## Korea

무선설비 전파 혼신 **(**사용주파수 **2400~2483.5 , 5725~5825** 무선제품해당**)**

해당 무선설비가 전파혼신 가능성이 있으므로 인명안전과 관련된 서비스는 할 수 없음

**SAR** 정보

본 장치는 전파 노출에 대한 가이드라인을 충족합니다.

본 장치는 무선 송수신기 입니다. 본 장치는 국제 가이드라인으로 권장되는 전파 노출에 대한 제한을 초과하지 않도록 설계되었습니다. 장치 액세서리 및 최신 부품을 사용할 경우 SAR 값이 달라질 수 있 습니다. SAR 값은 국가 보고 및 테스트 요구 사항과 네트워크 대역에 따라 다를 수 있습니다. 본 장치 는 사람의 신체에서 20mm 이상의 거리에서 사용할 수 있습니다.

# Environmental information of countries and regions

This section provides environmental, recycling, and RoHS information about Lenovo products.

## Recycling and environmental information

Lenovo encourages owners of information technology (IT) equipment to responsibly recycle their equipment when it is no longer needed. Lenovo offers a variety of programs and services to assist equipment owners in recycling their IT products. For information about recycling Lenovo products, go to:

https://www.lenovo.com/recycling

The latest environmental information about our products is available at:

https://www.lenovo.com/ecodeclaration

## Important WEEE information

The WEEE marking on Lenovo products applies to countries with WEEE and e-waste regulations (for example, the European WEEE Directive, India E-Waste Management Rules). Appliances are labeled in accordance with local regulations concerning waste electrical and electronic equipment (WEEE). These regulations determine the framework for the return and recycling of used appliances as applicable within

each geography. This label is applied to various products to indicate that the product is not to be thrown away, but rather put in the established collection systems for reclaiming these end of life products.

Users of electrical and electronic equipment (EEE) with the WEEE marking must not dispose of end of life EEE as unsorted municipal waste, but use the collection framework available to them for the return, recycle, and recovery of WEEE and to minimize any potential effects of EEE on the environment and human health due to the presence of hazardous substances. Lenovo electrical and electronic equipment (EEE) may contain parts and components, which at end-of-life might qualify as hazardous waste.

EEE and waste electrical and electronic equipment (WEEE) can be delivered free of charge to the place of sale or any distributor that sells electrical and electronic equipment of the same nature and function as the used EEE or WEEE.

For additional WEEE information, go to:

https://www.lenovo.com/recycling

### WEEE information for Hungary

Lenovo, as a producer, bears the cost incurred in connection with the fulfillment of Lenovo's obligations under Hungary Law No. 197/2014 (VIII.1.) subsections (1)-(5) of section 12.

## Japan recycling statements

### Collecting and recycling a disused Lenovo computer or monitor

If you are a company employee and need to dispose of a Lenovo computer or monitor that is the property of the company, you must do so in accordance with the Law for Promotion of Effective Utilization of Resources. Computers and monitors are categorized as industrial waste and should be properly disposed of by an industrial waste disposal contractor certified by a local government. In accordance with the Law for Promotion of Effective Utilization of Resources, Lenovo Japan provides, through its PC Collecting and Recycling Services, for the collecting, reuse, and recycling of disused computers and monitors. For details, visit the Lenovo Web site at:

https://www.lenovo.com/recycling/japan

Pursuant to the Law for Promotion of Effective Utilization of Resources, the collecting and recycling of home-used computers and monitors by the manufacturer was begun on October 1, 2003. This service is provided free of charge for home-used computers sold after October 1, 2003. For details, go to:

https://www.lenovo.com/recycling/japan

### Disposing of Lenovo computer components

Some Lenovo computer products sold in Japan may have components that contain heavy metals or other environmental sensitive substances. To properly dispose of disused components, such as a printed circuit board or drive, use the methods described above for collecting and recycling a disused computer or monitor.

### Disposing of disused lithium batteries from Lenovo computers

A button-shaped lithium battery is installed inside your Lenovo computer to provide power to the computer clock while the computer is off or disconnected from the main power source. If you need to replace it with a new one, contact your place of purchase or contact Lenovo for service. If you need to dispose of a disused lithium battery, insulate it with vinyl tape, contact your place of purchase or an industrial-waste-disposal operator, and follow their instructions.

Disposal of a lithium battery must comply with local ordinances and regulations.

**Disposing of a disused battery from Lenovo notebook computers**

Your Lenovo notebook computer has a lithium ion battery or a nickel metal hydride battery. If you are a company employee who uses a Lenovo notebook computer and need to dispose of a battery, contact the proper person in Lenovo sales, service, or marketing, and follow that person's instructions. You also can refer to the instructions at:

https://www.lenovo.com/jp/ja/environment/recycle/battery/

If you use a Lenovo notebook computer at home and need to dispose of a battery, you must comply with local ordinances and regulations. You also can refer to the instructions at:

https://www.lenovo.com/jp/ja/environment/recycle/battery/

## Recycling information for Brazil

*Declarações de Reciclagem no Brasil*

*Descarte de um Produto Lenovo Fora de Uso*

Equipamentos elétricos e eletrônicos não devem ser descartados em lixo comum, mas enviados à pontos de coleta, autorizados pelo fabricante do produto para que sejam encaminhados e processados por empresas especializadas no manuseio de resíduos industriais, devidamente certificadas pelos orgãos ambientais, de acordo com a legislação local.

A Lenovo possui um canal específico para auxiliá-lo no descarte desses produtos. Caso você possua um produto Lenovo em situação de descarte, ligue para o nosso SAC ou encaminhe um e-mail para: reciclar@lenovo.com, informando o modelo, número de série e cidade, a fim de enviarmos as instruções para o correto descarte do seu produto Lenovo.

## Battery recycling information for the European Union

**Notice:** This mark applies only to countries within the European Union (EU).

Batteries or packaging for batteries are labeled in accordance with European Directive 2006/66/EC concerning batteries and accumulators and waste batteries and accumulators. The Directive determines the framework for the return and recycling of used batteries and accumulators as applicable throughout the European Union. This label is applied to various batteries to indicate that the battery is not to be thrown away, but rather reclaimed upon end of life per this Directive.

In accordance with the European Directive 2006/66/EC, batteries and accumulators are labeled to indicate that they are to be collected separately and recycled at end of life. The label on the battery may also include a chemical symbol for the metal concerned in the battery (Pb for lead, Hg for mercury, and Cd for cadmium). Users of batteries and accumulators must not dispose of batteries and accumulators as unsorted municipal waste, but use the collection framework available to customers for the return, recycling, and treatment of batteries and accumulators. Customer participation is important to minimize any potential effects of batteries

and accumulators on the environment and human health due to the potential presence of hazardous substances.

Before placing electrical and electronic equipment (EEE) in the waste collection stream or in waste collection facilities, the end user of equipment containing batteries and/or accumulators must remove those batteries and accumulators for separate collection.

#### Disposing of lithium batteries and battery packs from Lenovo products

A coin-cell type lithium battery might be installed inside your Lenovo product. You can find details about the battery in the product documentation. If the battery needs to be replaced, contact your place of purchase or contact Lenovo for service. If you need to dispose of a lithium battery, insulate it with vinyl tape, contact your place of purchase or a waste-disposal operator, and follow their instructions.

#### Disposing of battery packs from Lenovo products

Your Lenovo device might contain a lithium-ion battery pack or a nickel metal hydride battery pack. You can find details on the battery pack in the product documentation. If you need to dispose of a battery pack, insulate it with vinyl tape, contact Lenovo sales, service, or your place of purchase, or a waste-disposal operator, and follow their instructions. You also can refer to the instructions provided in the user guide for your product.

For proper collection and treatment, go to:

https://www.lenovo.com/lenovo/environment

## Recycling information for China

《废弃电器电子产品回收处理管理条例》提示性说明

联想鼓励拥有联想品牌产品的用户当不再需要此类产品时，遵守国家废弃电器电子产品回收处理相关法律法规，将其交给当地具有国家认可的回收处理资质的厂商进行回收处理。更多回收服务信息，请点击进入http://support.lenovo.com.cn/activity/551.htm

## Battery recycling information for Taiwan

廢電池請回收

## Battery recycling information for the United States and Canada

US & Canada Only

## Restriction of Hazardous Substances (RoHS) Directive of countries and regions

The latest environmental information about Lenovo products is available at:

https://www.lenovo.com/ecodeclaration

### European Union RoHS

This Lenovo product, with included parts (cables, cords, and so on) meets the requirements of Directive 2011/65/EU on the restriction of the use of certain hazardous substances in electrical and electronic equipment ("RoHS recast" or "RoHS 2").

For more information about Lenovo worldwide compliance on RoHS, go to:

https://www.lenovo.com/rohs-communication

### Turkish RoHS

The Lenovo product meets the requirements of the Republic of Turkey Directive on the Restriction of the Use of Certain Hazardous Substances in Waste Electrical and Electronic Equipment (WEEE).

**Türkiye AEEE Yönetmeliğine Uygunluk Beyanı**

Bu Lenovo ürünü, T.C. Çevre ve Orman Bakanlığı'nın “Atık Elektrik ve Elektronik Eşyalarda Bazı Zararlı Maddelerin Kullanımının Sınırlandırılmasına Dair Yönetmelik (AEEE)” direktiflerine uygundur.

AEEE Yönetmeliğine Uygundur.

### Ukraine RoHS

Цим підтверджуємо, що продукція Леново відповідає вимогам нормативних актів України, які обмежують вміст небезпечних речовин

### India RoHS

RoHS compliant as per E-Waste (Management) Rules.

### China RoHS

The information in the following table is applicable to products manufactured on or after January 1, 2015 for sale in the People’s Republic of China.

## 产品中有害物质的名称及含量

| 部件名称 | 铅（Pb） | 汞（Hg） | 镉（Cd） | 六价铬（Cr（VI）） | 多溴联苯（PBB） | 多溴二苯醚（PBDE） |
|---|---|---|---|---|---|---|
| 印刷电路板组件 | X | O | O | O | O | O |
| 硬盘 | X | O | O | O | O | O |
| 光驱 | X | O | O | O | O | O |
| LCD 面板（LED 背光源） | X | O | O | O | O | O |
| 键盘 | X | O | O | O | O | O |
| 内存 | X | O | O | O | O | O |
| 电池 | X | O | O | O | O | O |
| 电源适配器 | X | O | O | O | O | O |
| 底壳、顶盖和扬声器 | X | O | O | O | O | O |

注：
本表依据SJ/T 11364的规定编制。

O：表示该有害物质在该部件所有均质材料中的含量均在 GB/T 26572标准规定的限量要求以下。

X：表示该有害物质至少在该部件的某一均质材料中的含量超出GB/T 26572标准规定的限量要求。标有“X”的部件，皆因全球技术发展水平限制而无法实现有害物质的替代。印刷电路板组件包括印刷电路板（PCB）及其组件、集成电路（IC）和连接器。某些型号的产品可能不包含上表中的某些部件，请以实际购买机型为准。

图示：

在中华人民共和国境内销售的电子信息产品上将印有“环保使用期限”（EPuP）符号。圆圈中的数字代表产品的正常环保使用期限。

**Taiwan RoHS**

| 單元 Unit | 限用物質及其化學符號<br>Restricted substances and its chemical symbols | | | | | |
|---|---|---|---|---|---|---|
| | 鉛Lead (Pb) | 汞Mercury (Hg) | 鎘Cadmium (Cd) | 六價鉻 Hexavalent chromium ($Cr^{+6}$) | 多溴聯苯 Polybrominated biphenyls (PBB) | 多溴二苯醚 Polybrominated diphenyl ethers (PBDE) |
| 印刷電路板組件 | – | ○ | ○ | ○ | ○ | ○ |
| 硬碟機 | – | ○ | ○ | ○ | ○ | ○ |
| LCD面板（LED背光源） | – | ○ | ○ | ○ | ○ | ○ |
| 鍵盤 | – | ○ | ○ | ○ | ○ | ○ |
| 記憶體 | – | ○ | ○ | ○ | ○ | ○ |
| 電源供應器 | – | ○ | ○ | ○ | ○ | ○ |
| 底殼、頂蓋和喇叭 | – | ○ | ○ | ○ | ○ | ○ |
| 麥克風 | – | ○ | ○ | ○ | ○ | ○ |
| 攝影機 | – | ○ | ○ | ○ | ○ | ○ |
| 風扇 | – | ○ | ○ | ○ | ○ | ○ |
| 分離式電源線組 | – | ○ | ○ | ○ | ○ | ○ |
| 固態硬碟 | – | ○ | ○ | ○ | ○ | ○ |

備考1.〝超出0.1 wt %〞及〝超出0.01 wt %〞係指限用物質之百分比含量超出百分比含量基準值。

Note 1："Exceeding 0.1 wt %" and "exceeding 0.01 wt %" indicate that the percentage content of the restricted substance exceeds the reference percentage value of presence condition.

備考2.〝○〞係指該項限用物質之百分比含量未超出百分比含量基準值。

Note 2："○" indicates that the percentage content of the restricted substance does not exceed the percentage of reference value of presence.

備考3.〝－〞係指該項限用物質為排除項目。

Note 3：The "–" indicates that the restricted substance corresponds to the exemption.

## Electromagnetic emission notices

## Federal Communications Commission (FCC) Supplier's Declaration of Conformity

The following information refers to Lenovo IdeaPad C340-14API, machine type(s): 81N6.

This equipment has been tested and found to comply with the limits for a Class B digital device, pursuant to Part 15 of the FCC Rules. These limits are designed to provide reasonable protection against harmful interference in a residential installation. This equipment generates, uses, and can radiate radio frequency

energy and, if not installed and used in accordance with the instructions, may cause harmful interference to radio communications. However, there is no guarantee that interference will not occur in a particular installation. If this equipment does cause harmful interference to radio or television reception, which can be determined by turning the equipment off and on, the user is encouraged to try to correct the interference by one or more of the following measures:

- Reorient or relocate the receiving antenna.
- Increase the separation between the equipment and receiver.
- Connect the equipment into an outlet on a circuit different from that to which the receiver is connected.
- Consult an authorized dealer or service representative for help.

Lenovo is not responsible for any radio or television interference caused by using other than recommended cables and connectors or by unauthorized changes or modifications to this equipment. Unauthorized changes or modifications could void the user's authority to operate the equipment.

This device complies with Part 15 of the FCC Rules. Operation is subject to the following two conditions: (1) this device may not cause harmful interference, and (2) this device must accept any interference received, including interference that may cause undesired operation.

Responsible Party:
Lenovo (United States) Incorporated
7001 Development Drive
Morrisville, NC 27560
Email: FCC@lenovo.com

## Industry Canada compliance statement

CAN ICES-3(B)/NMB-3(B)

## European Union conformity

EU Contact: Lenovo (Slovakia), Landererova 12, 811 09 Bratislava, Slovakia

### Compliance with the EMC Directive

This product is in conformity with the protection requirements of EU Council Directive 2014/30/EU on the approximation of the laws of the Member States relating to electromagnetic compatibility.

This product has been tested and found to comply with the limits for Class B equipment according to European Standards harmonized in the Directives in compliance. The Class B requirements for equipment are intended to offer adequate protection to broadcast services within residential environments.

### EU ErP (EcoDesign) Directive (2009/125/EC) - external power adapters (Regulation (EU) 2019/1782)

Lenovo products are designed to work with a range of compatible power adapters. Access https://www.lenovo.com/us/en/compliance/eu-doc to view the compatible power adapters. For the detailed power adapter specifications for your computer, go to https://support.lenovo.com.

## German Class B compliance statement

*Hinweis zur Einhaltung der Klasse B zur elektromagnetischen Verträglichkeit*

Dieses Produkt entspricht den Schutzanforderungen der EU-Richtlinie zur elektromagnetischen Verträglichkeit Angleichung der Rechtsvorschriften über die elektromagnetische Verträglichkeit in den EU-Mitgliedsstaaten und hält die Grenzwerte der Klasse B der Norm gemäß Richtlinie.

Um dieses sicherzustellen, sind die Geräte wie in den Handbüchern beschrieben zu installieren und zu betreiben. Des Weiteren dürfen auch nur von der Lenovo empfohlene Kabel angeschlossen werden. Lenovo übernimmt keine Verantwortung für die Einhaltung der Schutzanforderungen, wenn das Produkt ohne Zustimmung der Lenovo verändert bzw. wenn Erweiterungskomponenten von Fremdherstellern ohne Empfehlung der Lenovo gesteckt/eingebaut werden.

Zulassungsbescheinigung laut dem Deutschen Gesetz über die elektromagnetische Verträglichkeit von Betriebsmitteln, EMVG vom 20. Juli 2007 (früher Gesetz über die elektromagnetische Verträglichkeit von Geräten), bzw. der EU Richtlinie 2014/30/EU, der EU Richtlinie 2014/53/EU Artikel 3.1b), für Geräte der Klasse B.

Dieses Gerät ist berechtigt, in Übereinstimmung mit dem Deutschen EMVG das EG-Konformitätszeichen - CE - zu führen. Verantwortlich für die Konformitätserklärung nach Paragraf 5 des EMVG ist die Lenovo (Deutschland) GmbH, Meitnerstr. 9, D-70563 Stuttgart.

## Japan VCCI Class B compliance statement

この装置は、クラスB機器です。この装置は、住宅環境で使用することを目的としていますが、この装置がラジオやテレビジョン受信機に近接して使用されると、受信障害を引き起こすことがあります。
取扱説明書に従って正しい取り扱いをして下さい。

VCCI-B

## Japan compliance statement for products which connect to the power mains with rated current less than or equal to 20 A per phase

日本の定格電流が 20A/相 以下の機器に対する高調波電流規制
高調波電流規格 JIS C 61000-3-2 適合品

## Japan notice for ac power cord

The ac power cord shipped with your product can be used only for this specific product. Do not use the ac power cord for other devices.

本製品およびオプションに電源コード・セットが付属する場合は、
それぞれ専用のものになっていますので他の電気機器には使用し
ないでください。

# Other compliance information

This section provides other compliance information about Lenovo products.

## TCO certification

To obtain the TCO certification information for your computer, go to:

https://www.lenovo.com/tco-cert

## Export classification notice

This product is subject to the United States Export Administration Regulations (EAR) and has an Export Classification Control Number (ECCN) of 5A992.c. It can be re-exported except to any of the embargoed countries in the EAR E1 country list.

## Lenovo product service information for Taiwan

委製商/進口商名稱: 荷蘭商聯想股份有限公司台灣分公司
進口商地址: 台北市中山區北安路780號7樓
進口商電話: 0800-000-702 (代表號)

## Taiwan precautionary vision statement

警語：使用過度恐傷害視力

注意事項：

- 使用30分鐘請休息10分鐘。
- 2歲以下幼兒不看螢幕，2歲以上每天看螢幕不要超過1小時。

## Eurasian compliance mark

EAC

## Brazil audio notice

Ouvir sons com mais de 85 decibéis por longos períodos pode provocar danos ao sistema auditivo.

# Appendix D. Notices and trademarks

### Notices

Lenovo may not offer the products, services, or features discussed in this document in all countries. Consult your local Lenovo representative for information on the products and services currently available in your area. Any reference to a Lenovo product, program, or service is not intended to state or imply that only that Lenovo product, program, or service may be used. Any functionally equivalent product, program, or service that does not infringe any Lenovo intellectual property right may be used instead. However, it is the user's responsibility to evaluate and verify the operation of any other product, program, or service.

Lenovo may have patents or pending patent programs covering subject matter described in this document. The furnishing of this document does not give you any license to these patents. You can send license inquiries, in writing, to:
Lenovo (United States), Inc.
1009 Think Place - Building One
Morrisville, NC 27560
U.S.A.
Attention: Lenovo Director of Licensing

LENOVO PROVIDES THIS PUBLICATION "AS IS" WITHOUT WARRANTY OF ANY KIND, EITHER EXPRESS OR IMPLIED, INCLUDING, BUT NOT LIMITED TO, THE IMPLIED WARRANTIES OF NON-INFRINGEMENT, MERCHANTABILITY OR FITNESS FOR A PARTICULAR PURPOSE. Some jurisdictions do not allow disclaimer of express or implied warranties in certain transactions, therefore, this statement may not apply to you.

Changes are made periodically to the information herein; these changes will be incorporated in new editions of the publication. To provide better service, Lenovo reserves the right to improve and/or modify the products and software programs described in the manuals included with your computer, and the content of the manual, at any time without additional notice.

The software interface and function and hardware configuration described in the manuals included with your computer might not match exactly the actual configuration of the computer that you purchase. For the configuration of the product, refer to the related contract (if any) or product packing list, or consult the distributor for the product sales. Lenovo may use or distribute any of the information you supply in any way it believes appropriate without incurring any obligation to you.

The products described in this document are not intended for use in implantation or other life support applications where malfunction may result in injury or death to persons. The information contained in this document does not affect or change Lenovo product specifications or warranties. Nothing in this document shall operate as an express or implied license or indemnity under the intellectual property rights of Lenovo or third parties. All information contained in this document was obtained in specific environments and is presented as an illustration. The result obtained in other operating environments may vary.

Lenovo may use or distribute any of the information you supply in any way it believes appropriate without incurring any obligation to you.

Any references in this publication to non-Lenovo Web sites are provided for convenience only and do not in any manner serve as an endorsement of those Web sites. The materials at those Web sites are not part of the materials for this Lenovo product, and use of those Web sites is at your own risk.

© Copyright Lenovo 2018

Any performance data contained herein was determined in a controlled environment. Therefore, the result obtained in other operating environments may vary significantly. Some measurements may have been made on development-level systems and there is no guarantee that these measurements will be the same on generally available systems. Furthermore, some measurements may have been estimated through extrapolation. Actual results may vary. Users of this document should verify the applicable data for their specific environment.

This document is copyrighted by Lenovo and is not covered by any open source license, including any Linux agreement(s) which may accompany software included with this product. Lenovo may update this document at any time without notice.

For the latest information or any questions or comments, contact or visit the Lenovo Web site:

https://support.lenovo.com

**Trademarks**

LENOVO and the LENOVO logo are trademarks of Lenovo. Microsoft, Windows, Direct3D, and Cortana are trademarks of the Microsoft group of companies. The terms HDMI and HDMI High-Definition Multimedia Interface are trademarks or registered trademarks of HDMI Licensing LLC in the United States and other countries. Wi-Fi and Miracast are registered trademarks of Wi-Fi Alliance. USB-C is a trademark of USB Implementers Forum. All other trademarks are the property of their respective owners. © 2018 Lenovo.