E14/R14/E15/S3 Gen 2
User Guide

Read this first

Before using this documentation and the product it supports, ensure that you read and understand the following:

- Appendix A “Important safety information” on page 57
- *Safety and Warranty Guide*
- *Setup Guide*

Third Edition (September 2019)

© Copyright Lenovo 2020.

LIMITED AND RESTRICTED RIGHTS NOTICE: If data or software is delivered pursuant to a General Services Administration “GSA” contract, use, reproduction, or disclosure is subject to restrictions set forth in Contract No. GS-35F-05925.

Contents

About this documentation iii

Chapter 1. Meet your computer 1
Front 1
Base (E14/R14/S3 Gen 2) 2
Base (E15) 3
Left 4
Right 6
Features and specifications 7
Statement on USB transfer rate 8

Chapter 2. Get started with your computer 9
Get started with Windows 10 9
Windows account 9
Windows user interface 10
Windows label 11
Connect to networks 11
Connect to the wired Ethernet 11
Connect to Wi-Fi networks. 11
Connect to a Bluetooth-enabled device. . . . 12
Use Lenovo Vantage 12
Interact with your computer 12
Use the keyboard shortcuts 13
Use the TrackPoint pointing device 15
Use the trackpad 16
Use multimedia 18
Use audio 18
Use the camera 18
Connect to an external display 19

Chapter 3. Explore your computer . . 21
Manage power 21
Check the battery status and temperature. . . 21
Charge the computer 21
Maximize the battery life 22
Set power button behaviors 22
Set the power plan 22
Airplane mode 22
Purchase options 23

Chapter 4. Secure your computer and information 25
Lock the computer 25
Use passwords 25
Password types 25
Set, change, and remove a password 27
Use the fingerprint reader (for selected models) . . 28
Use firewalls and antivirus programs. 28

Chapter 5. Configure advanced settings. 29
UEFI BIOS 29
What is UEFI BIOS 29
Enter the UEFI BIOS menu 29
Navigate in the UEFI BIOS interface 29
Change the startup sequence 29
Set the system date and time. 30
Update UEFI BIOS 30
Recovery information 30
Restore system files and settings to an earlier point 30
Restore your files from a backup 30
Reset your computer 30
Use advanced options 31
Windows automatic recovery. 31
Create and use a recovery USB device 31
Install Windows 10 and drivers 31

Chapter 6. CRU replacement 35
What are CRUs 35
Disable Fast Startup and the built-in battery 35
Replace a CRU 36
Base cover assembly 36
Memory module 39
Internal storage drive 40
M.2 solid-state drive 43
Speaker assembly 48

Chapter 7. Help and support 51
Frequently asked questions 51
Error messages 52
Beep errors 53
Self-help resources 54
Call Lenovo 54
Before you contact Lenovo 54
Lenovo Customer Support Center 55
Purchase additional services. 56

Appendix A. Important safety information 57

Appendix B. Accessibility and ergonomic information 71

© Copyright Lenovo 2020

Appendix C. Compliance and TCO Certified information 75

Appendix D. Notices and trademarks 89

About this documentation

- Illustrations in this documentation might look different from your product.
- Depending on the model, some optional accessories, features, and software programs might not be available on your computer.
- Depending on the version of operating systems and programs, some user interface instructions might not be applicable to your computer.
- Documentation content is subject to change without notice. Lenovo makes constant improvements on the documentation of your computer, including this *User Guide*. To get the latest documentation, go to https://pcsupport.lenovo.com.
- Microsoft® makes periodic feature changes to the Windows® operating system through Windows Update. As a result, some information in this documentation might become outdated. Refer to Microsoft resources for the latest information.

© Copyright Lenovo 2020

Chapter 1. Meet your computer

Front

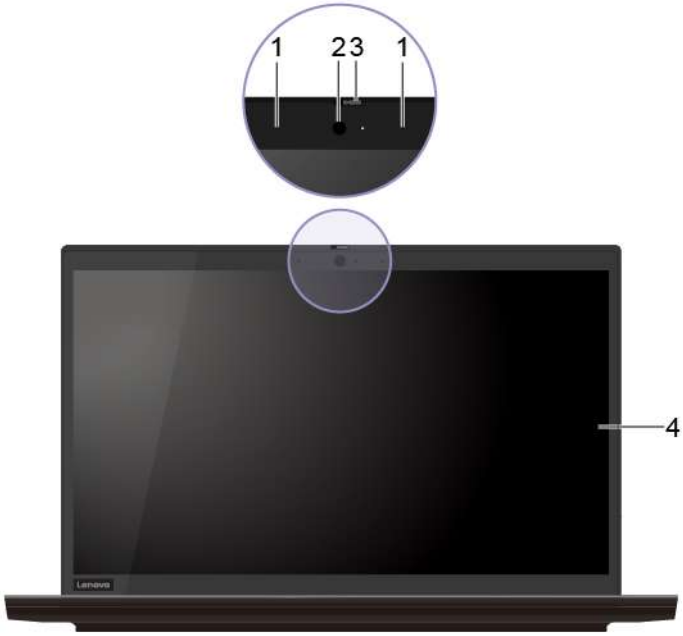

1. Microphones	Capture or record sound.
2. Camera	Take pictures or record videos by clicking **Camera** from the Start menu. The indicator next to the camera is on when the camera is in use. If you use other apps that support photographing, video chatting, and video conference, the camera starts automatically when you enable the camera-required feature from the app.
3. ThinkShutter*	Slide ThinkShutter to cover or uncover the camera lens. It is designed to protect your privacy.
4. Screen	User the full high definition (FHD) display to enhance your visual experience when you watch movies, browse the Web, and so on.

* for selected models

© Copyright Lenovo 2020

Base (E14/R14/S3 Gen 2)

1. Power button/fingerprint reader	**Use as power button** Press to turn on the computer or put the computer to sleep mode. To turn off the computer, open the Start menu, click ⏻ **Power**, and then select **Shut down**. The indicator shows the status of the system: • **White, blinking for three times:** The computer is initially connected to power. • **White, solid on:** The computer is on. • **Off:** The computer is off or in hibernation mode. • **White, blinking rapidly:** The computer is entering sleep or hibernation mode. • **White, blinking slowly:** The computer is in sleep mode. **Use as fingerprint reader*** Log in to your computer with enrolled fingerprints if your computer supports fingerprint reader. See “Use the fingerprint reader (for selected models)” on page 28. The indicator shows the status of the fingerprint reader: • **Green, blinking for two seconds, then turn solid on:** The computer is ready for fingerprint scan. • **White, solid on:** The scan is successful.
2. Speakers	Enable you to experience high-quality sound.
3. Trackpad	Perform finger touch and all the functions of a traditional mouse. See “Use the trackpad” on page 16.
4. TrackPoint® pointing device	Perform all the functions of a traditional mouse. See “Use the TrackPoint pointing device” on page 15.

* for selected models

Base (E15)

1. Power button/fingerprint reader	**Use as power button** Press to turn on the computer or put the computer to sleep mode. To turn off the computer, open the Start menu, click ⏻ **Power**, and then select **Shut down**. The indicator shows the status of the system: • **White, blinking for three times:** The computer is initially connected to power. • **White, solid on:** The computer is on. • **Off:** The computer is off or in hibernation mode. • **White, blinking rapidly:** The computer is entering sleep or hibernation mode. • **White, blinking slowly:** The computer is in sleep mode. **Use as fingerprint reader*** Log in to your computer with enrolled fingerprints if your computer supports fingerprint reader. See “Use the fingerprint reader (for selected models)” on page 28. The indicator shows the status of the fingerprint reader: • **Green, blinking for two seconds, then turn solid on:** The computer is ready for fingerprint scan. • **White, solid on:** The scan is successful.
2. Numeric keypad	Quickly input numbers.
3. Speakers	Enable you to experience high-quality sound.
4. Trackpad	Perform finger touch and all the functions of a traditional mouse. See “Use the trackpad” on page 16.
5. TrackPoint® pointing device	Perform all the functions of a traditional mouse. See “Use the TrackPoint pointing device” on page 15.

* for selected models

Left

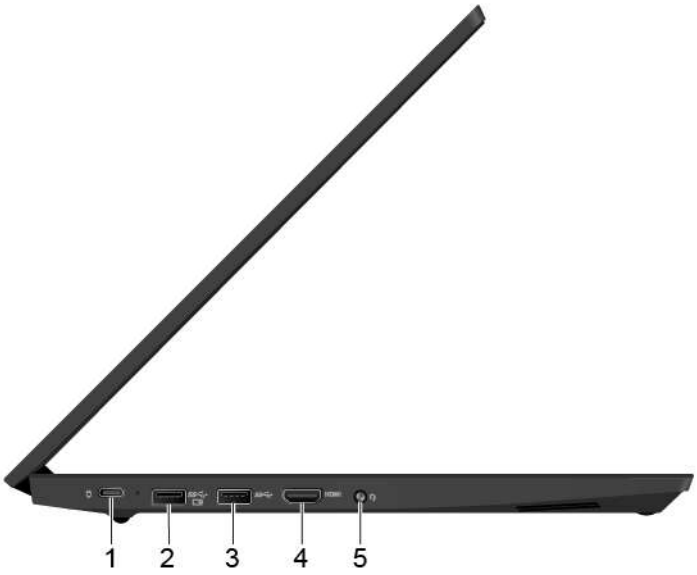

1. USB-C™ connector (USB 3.2 Gen 1)	• Charge your computer. • Charge USB-C compatible devices with the output voltage and current of 5 V and 3 A. • Transfer data at USB 3.2 speed, up to 5 Gbps. • Connect to an external display: – USB-C to VGA: 1920 x 1080 pixels, 60 Hz – USB-C to DP: 3840 x 2160 pixels, 60 Hz • Connect to USB-C accessories to help expand your computer functionality. To purchase USB-C accessories, go to https://www.lenovo.com/accessories. • Supply power to another computer using P-to-P (Peer to Peer) 2.0 charging function. See “Use P-to-P 2.0 charging function” on page 21. **Note:** When the battery power is below 10%, the connected USB-C accessories might not work correctly.
2. Always On USB 3.2 connector Gen 1	With the Always On USB feature enabled, the Always On USB 3.2 connector Gen 1 can charge a USB-compatible device when the computer is on, off, in sleep mode, or in hibernation mode. **Notes:** • By default, **Always On USB** is enabled and **Charge in Battery Mode** is disabled in UEFI BIOS. • When the computer is off or in hibernation mode, and **Charge in Battery Mode** is disabled in UEFI BIOS, ensure that you have connected the computer to ac power. To enable the Always On USB feature: 1. Enter the UEFI BIOS menu. See “Enter the UEFI BIOS menu” on page 29. 2. Click **Config → USB → Always On USB** to enable the Always On USB feature.

3. USB 3.2 connector Gen 1	Connect USB-compatible devices, such as a USB keyboard, USB mouse, USB storage device, or USB printer.
4. HDMI™ connector	The High-Definition Multimedia Interface (HDMI) connector is a digital audio and video interface. It enables you to connect your computer to a compatible digital audio device or video monitor, such as a DVD player or an HDTV.
5. Audio connector	• Connect headphones with a 3.5-mm (0.14-inch) and 4-pole plug to listen to the sound from the computer. • Connect a headset with a 3.5-mm (0.14-inch) and 4-pole plug to listen to the sound from the computer or talk with others. **Note:** This connector does not support standalone external microphones.

Right

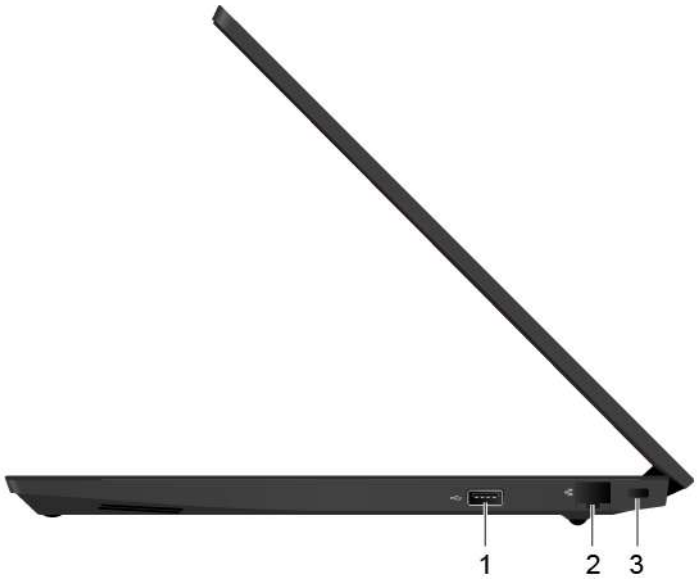

1. USB 2.0 connector	Connect a USB-compatible device, such as a USB keyboard, USB mouse, USB storage device, or USB printer.
2. Ethernet connector	Connect to a local area network (LAN).
3. Security-lock slot	Lock your computer to a desk, table, or other fixtures through a compatible security cable lock. See “Lock the computer” on page 25.

Features and specifications

Dimensions	**E14/R14/S3 Gen 2:** • Width: 325.3 mm (12.80 inches) • Depth: 232.8 mm (9.17 inches) • Thickness: 18.8 mm to 21.4 mm (0.74 inches to 0.84 inches) **E15:** • Width: 368 mm (14.49 inches) • Depth: 245 mm (9.65 inches) • Thickness: 19.75 mm (0.78 inches)
Maximum heat output (depending on the model)	• 45 W (154 Btu/hr) • 65 W (222 Btu/hr)
Power source (ac power adapter)	• Sine-wave input at 50 Hz to 60 Hz • Input rating of the ac power adapter: 100 V to 240 V ac, 50 Hz to 60 Hz
Microprocessor	To view the microprocessor information of your computer, right-click the **Start** button and then click **System**.
Memory	Single data rate 4 (DDR4)
Storage device	• 2.5-inch form factor, 7-mm (0.28-inch) height storage drive • M.2 solid-state drive • Intel® Optane™ memory*
Display	• Brightness control • Color display with In-Plane Switching (IPS) or Twisted Nematic (TN) technology • Display size: – **E14/R14/S3 Gen 2:** 355.6 mm (14 inches) – **E15:** 396.24 mm (15.6 inches) • Display resolution: 1920 x 1080 pixels
Keyboard	• Function keys • Numeric keypad (E15 only) • Six-row keyboard or six-row keyboard with backlight • Trackpad • TrackPoint pointing device
Connectors and slots	• Audio connector • Ethernet connector • Two USB 3.2 connectors Gen 1 (including one Always On USB 3.2 connector Gen 1) • USB 2.0 connector • HDMI connector • USB-C connector (USB 3.2 Gen 1)

Security features	• Fingerprint reader* • ThinkShutter* • Password • Security-lock slot • Trusted Platform Module (TPM)*
Wireless features	• Bluetooth • Wireless LAN
Others	• Camera • Microphones

* for selected models

Statement on USB transfer rate

Depending on many factors such as the processing capability of the host and peripheral devices, file attributes, and other factors related to system configuration and operating environments, the actual transfer rate using the various USB connectors on this device will vary and will be slower than the data rate listed below for each corresponding device.

USB device	Data rate (Gbit/s)
3.2 Gen 1 / 3.1 Gen 1	5
3.2 Gen 2 / 3.1 Gen 2	10
3.2 Gen 2 × 2	20

Chapter 2. Get started with your computer

Get started with Windows 10

Learn the basics of Windows 10 and start working with it right away. For more information about Windows 10, see the Windows help information.

Windows account

A user account is required to use the Windows operating system. It can either be a Windows user account or a Microsoft account.

Windows user account

When you start Windows for the first time, you are prompted to create a Windows user account. This first account you created is of the “Administrator” type. With an Administrator account, you can create additional user accounts or change account types by doing the following:

1. Open the **Start** menu and select **Settings** → **Accounts** → **Family & other users**.
2. Follow the on-screen instructions.

Microsoft account

You can also log in to the Windows operating system with a Microsoft account.

To create a Microsoft account, go to the Microsoft sign-up page at https://signup.live.com and follow the on-screen instructions.

With a Microsoft account, you can:

- Enjoy one-time signing in if you are using other Microsoft services, such as OneDrive, Skype, and Outlook.com.
- Sync personalized settings across other Windows-based devices.

© Copyright Lenovo 2020

Windows user interface

1. **Account**	Change account settings, lock the computer, or sign out from the current account.
2. **Documents**	Open the **Documents** folder, a default folder to save your received files.
3. **Pictures**	Open the **Pictures** folder, a default folder to save your received pictures.
4. **Settings**	Launch Settings.
5. **Power**	Shut down, restart, or put the computer into sleep mode.
6. **Start button**	Open the **Start** menu.
7. **Windows Search**	Type what you are looking for in the search box and get search results from your computer and the Web.
8. **Task View**	Display all opened apps and switch among them.
9. **Windows notification area**	Display notifications and status of some features.
10. **Battery status icon**	Display power status and change battery or power settings. When your computer is not connected to ac power, the icon changes to .
11. **Network icon**	Connect to an available wireless network and display the network status. When connected to a wired network, the icon changes to .
12. **Action center**	Display the latest notifications from apps and provide quick access to some features.

Open the Start menu

- Click the **Start** button.
- Press the Windows logo key on the keyboard.

Access Control Panel

- Open the **Start** menu and click **Windows System** → **Control Panel**.

- Use Windows Search.

Launch an app

- Open the **Start** menu and select the app you want to launch.
- Use Windows Search.

Windows label

Your computer might have a Windows 10 Genuine Microsoft label affixed to its cover depending on the following factors:

- Your geographic location
- Edition of Windows 10 that is preinstalled

Go to https://www.microsoft.com/en-us/howtotell/Hardware.aspx for illustrations of the various types of Genuine Microsoft labels.

- In the People's Republic of China, the Genuine Microsoft label is required on all computer models preinstalled with any version of Windows 10.
- In other countries and regions, the Genuine Microsoft label is required only on computer models licensed for Windows 10 Pro.

The absence of a Genuine Microsoft label does not indicate that the preinstalled Windows version is not genuine. For details on how to tell whether your preinstalled Windows product is genuine, refer to the information provided by Microsoft at https://www.microsoft.com/en-us/howtotell/default.aspx.

There are no external, visual indicators of the Product ID or Windows version for which the computer is licensed. Instead, the Product ID is recorded in the computer firmware. Whenever a Windows 10 product is installed, the installation program checks the computer firmware for a valid, matching Product ID to complete the activation.

In some cases, an earlier Windows version might be preinstalled under the terms of the Windows 10 Pro license downgrade rights.

Connect to networks

Your computer helps you connect to the world through a wired or wireless network.

Connect to the wired Ethernet

Connect your computer to a local network through the Ethernet connector on your computer with an Ethernet cable.

Note: If the computer is connected to a supported docking station or dock, use the Ethernet connector on the docking station or dock instead of the one on the computer.

Connect to Wi-Fi networks

1. Click the network icon in the Windows notification area. A list of available wireless networks is displayed.
2. Select a network available for connection. Provide required information, if needed.

Connect to a Bluetooth-enabled device

You can connect all types of Bluetooth-enabled devices to your computer, such as a keyboard, a mouse, a smartphone, or speakers. To ensure successful connection, place the devices at most 10 meters (33 feet) from the computer.

1. Click the action center icon in the Windows notification area, and enable the Bluetooth feature.
2. Right-click the **Bluetooth** icon.
3. Select **Go To Settings** → **Add Bluetooth or other device** → **Bluetooth**.
4. Select a Bluetooth device, and then follow the on-screen instructions.

Use Lenovo Vantage

The preinstalled Lenovo Vantage is a customized one-stop solution to help you maintain your computer with automated updates and fixes, configure hardware settings, and get personalized support.

Access Lenovo Vantage

Open the **Start** menu and click **Lenovo Vantage**. You also can type `Lenovo Vantage` in the search box.

To download the latest version of Lenovo Vantage, go to Microsoft Store and search by the app name.

Key features

Lenovo Vantage enables you to:

- Know the device status easily and customize device settings.
- Download and install UEFI BIOS, firmware, and driver updates to keep your computer up-to-date.
- Monitor your computer health, and secure your computer against outside threats.
- Scan your computer hardware and diagnose hardware problems.
- Look up warranty status (online).
- Access *User Guide* and helpful articles.

Notes:

- The available features vary depending on the computer model.
- Lenovo Vantage makes periodic updates of the features to keep improving your experience with your computer. The description of features might be different from that on your actual user interface.

Interact with your computer

Your computer provides you various ways to navigate the screen.

Use the keyboard shortcuts

The special keys on the keyboard help you work more easily and effectively.

E14/R14/S3 Gen 2

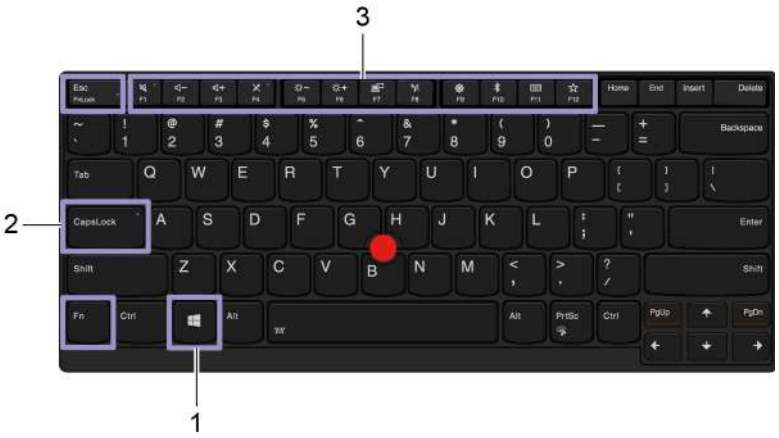

E15

1. Windows logo key	Open the Start menu. For information about using this key with other keys, see the Windows help information.
2. Caps Lock key	Switch the letter case between the upper case and lower case. When the key indicator is on, you can type uppercase letters.
3. F1–F12 function keys	Invoke the special function printed as an icon on each key or standard function. To choose whether to invoke the special function or standard function: 1. Go to Control Panel and view by Large icons or Small icons. 2. Click **Keyboard** or **Lenovo - Keyboard Manager** and select the option of your preference.
4. Numeric keypad	Input numbers quickly when the Numeric Lock indicator is on.

Fn + Esc FnLock	Switch the function of the F1–F12 keys between the standard function and special function printed as an icon on each key. When the Fn Lock indicator is on: • Press F1-F12 to use the standard function. • Press Fn+F1-F12 to use the special function. When the Fn Lock indicator is off: • Press Fn+F1-F12 to use the standard function. • Press F1-F12 to use the special function.
F1	Mute or unmute the speakers. When the key indicator is on, the speakers are muted. If you mute the speakers and turn off your computer, the speakers remain muted when you turn on your computer.
F2	Decrease the speaker volume.
F3	Increase the speaker volume.
F4	Mute or unmute the microphones. When the key indicator is on, the microphones are muted.
F5	Darken the computer display.
F6	Brighten the computer display.
F7	Manage external displays.
F8	Enable or disable the built-in wireless features.
F9	Open the Settings window.
F10	Enable or disable the built-in Bluetooth features.
F11	Open a keyboard setting page.
F12	Invoke the function defined by yourself. You can define different functions for the F12 key on Lenovo Vantage.
Fn + (for E15 only)	Open the calculator.
Fn + Backspace	Put your computer to sleep mode.
Fn + PrtSc	Open the Snipping Tool program.
Fn+Spacebar	Switch between different keyboard backlight statuses if your computer supports keyboard backlight.
Fn+B	Equal the Break key on a conventional external keyboard.

Fn+K	Equal the ScrLK or Scroll Lock key on a conventional external keyboard.
Fn+P	Equal the Pause key on a conventional external keyboard.
Fn+S	Equal the SysRq key on a conventional external keyboard.
Fn+4	Put the computer to sleep mode. To wake up the computer, press Fn or the power button.
Fn+Left arrow key	Equal the Home key.
Fn+Right arrow key	Equal the End key.

Use the TrackPoint pointing device

The TrackPoint pointing device enables you to perform all the functions of a traditional mouse, such as pointing, clicking, and scrolling.

Use the TrackPoint pointing device

1. **Pointing stick**

Use your index finger or middle finger to apply pressure to the pointing-stick nonslip cap in any direction parallel to the keyboard. The pointer on the screen moves accordingly but the pointing stick itself does not move. The higher the pressure applied, the faster the pointer moves.

2. **Left-click button**

Press to select or open an item.

3. **Right-click button**

Press to display a shortcut menu.

4. **Middle button**

Press and hold the dotted middle button while applying pressure to the pointing stick in the vertical or horizontal direction. Then, you can scroll through the document, Web site, or apps.

Disable the TrackPoint pointing device

The TrackPoint pointing device is active by default. To disable the device:

1. Open the **Start** menu, and then click **Settings** → **Devices** → **Mouse**.
2. Follow the on-screen instructions to disable TrackPoint.

Replace the pointing-stick nonslip cap

Note: Ensure that the new cap has grooves a.

Use the trackpad

The entire trackpad surface is sensitive to finger touch and movement. You can use the trackpad to perform all the pointing, clicking, and scrolling functions of a traditional mouse.

Use the trackpad

1. **Left-click zone**

Press to select or open an item.

You also can tap anywhere on the surface of the trackpad with one finger to perform the left-click action.

2. **Right-click zone**

Press to display a shortcut menu.

You also can tap anywhere on the surface of the trackpad with two fingers to perform the right-click action.

Use the touch gestures

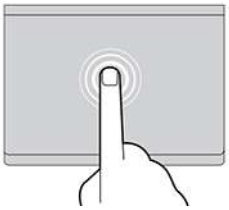

Tap

Tap anywhere on the trackpad with one finger to select or open an item.

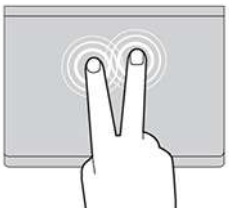

Two-finger tap

Tap anywhere on the trackpad with two fingers to display a shortcut menu.

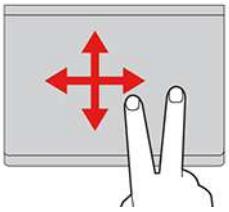

Two-finger scroll

Put two fingers on the trackpad and move them in the vertical or horizontal direction. This action enables you to scroll through the document, Web site, or apps.

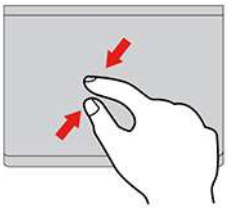

Two-finger zoom out

Put two fingers on the trackpad and move them closer together to zoom out.

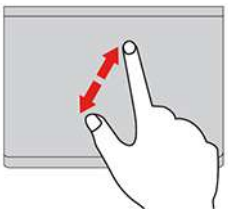

Two-finger zoom in

Put two fingers on the trackpad and move them farther apart to zoom in.

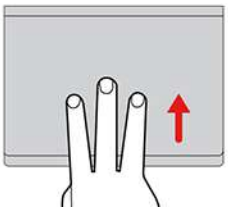

Swipe three fingers up

Put three fingers on the trackpad and move them up to open the task view to see all your open windows.

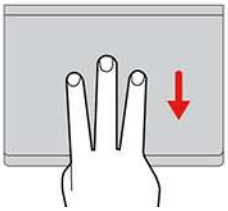

Swipe three fingers down

Put three fingers on the trackpad and move them down to show the desktop.

Notes:
- When using two or more fingers, ensure that you position your fingers slightly apart.
- Some gestures are not available if the last action was done from the TrackPoint pointing device.
- Some gestures are only available when you are using certain apps.
- If the trackpad surface is stained with oil, turn off the computer first. Then, gently wipe the trackpad surface with a soft and lint-free cloth moistened with lukewarm water or computer cleaner.

For more gestures, see the help information of the pointing device.

Disable the trackpad

The trackpad is active by default. To disable the device:

1. Open the **Start** menu, and then click **Settings → Devices → Touchpad**.
2. In the Touchpad section, turn off the **Touchpad** control.

Use multimedia

Use your computer for business or entertainment with the built-in components (camera, speakers, and audio features) or connected external devices (an external projector, monitor, and HDTV).

Use audio

To enhance your audio experience, connect speakers, headphones, or a headset with a 3.5-mm (0.14-inch), 4-pole plug to the audio connector.

Change the sound settings

1. Go to **Control Panel** and view by category.
2. Click **Hardware and Sound → Sound**.
3. Change the settings as you prefer.

Use the camera

You can use the built-in camera to take photos or record videos. The indicator next to the camera turns on when the camera is in use.

To take photos or record videos:

1. Slide ThinkShutter to the right to uncover the camera lens.

2. Open the **Start** menu and click **Camera**.
3. To take photos, click the camera icon. If you want to record videos, click the video icon to switch to video mode.

If you use other programs that provide features such as photographing, video capturing, and video conference, the camera starts automatically when you enable the camera-required feature.

Connect to an external display

Connect your computer to a projector or a monitor to give presentations or expand your workspace.

Connect to a wired display

1. Connect the external display to an appropriate video connector on your computer, such as an HDMI connector or the USB-C connector.
2. Connect the external display to an electrical outlet.
3. Turn on the external display.

If your computer cannot detect the external display, right-click a blank area on the desktop, and then click **Display settings → Detect**.

Supported resolution

The following table lists the supported maximum resolution of the external display.

Connect the external display to	Supported resolution
the USB-C connector (USB 3.1 Gen 1)	Up to 4096 x 2304 pixels / 60 Hz
the HDMI connector	UUp to 4096 x 2160 pixels / 24 Hz

Connect to a wireless display

To use a wireless display, ensure that both your computer and the external display support the Miracast® feature.

- Open the Start menu, and then click **Settings → Devices → Bluetooth & other devices → Add Bluetooth or other device**. In the Add a device window, click **Wireless display or dock**. Then, follow the instructions on the screen.
- Click the action center icon in the Windows notification area and click **Connect**. Select the wireless display and follow the on-screen instructions.

Set the display mode

Press F7 or Fn + F7 and then select a display mode of your preference.

- **Duplicate these displays**: Display the same video output on both your computer screen and an external display.
- **Extend these displays**: Extend the video output from your computer display to an external display. You can drag and move items between the two displays.
- **Show only on 1**: Display the video output only on your computer screen.
- **Show only on 2**: Display the video output only on an external display.

If you show programs using DirectDraw or Direct3D® in full-screen mode, only the main display shows the video output.

Change display settings

1. Right-click a blank area on the desktop and select **Display settings**.
2. Select the display that you want to configure.
3. Change display settings of your preference.

You can change the settings for both the computer display and the external display. For example, you can define which one is the main display and which one is the secondary display. You also can change the resolution and orientation.

Note: If you set a higher resolution for the computer display than the external display, only part of the screen can be displayed on the external display.

Chapter 3. Explore your computer

Manage power

Use the information in this section to achieve the best balance between performance and power efficiency.

Check the battery status and temperature

Check the battery status

The battery status icon or is in the Windows notification area. You can click the icon to check the battery status, view the current power plan, change the power mode, and access battery settings quickly.

Check the battery temperature

Open Lenovo Vantage, and then follow the on-screen instructions to view battery details.

Charge the computer

Use ac power

When the battery power is low, charge your battery by connecting your computer to ac power.

The battery is fully charged in about four to eight hours. If the power adapter shipped with your computer supports the rapid charge function, the battery is 80% charged in about one hour when the computer is turned off. The actual charging time depends on the battery size, the physical environment, and whether you are using the computer.

Battery charging is also affected by the battery temperature. The recommended battery temperature range for charging the battery is between 10°C (50°F) and 35°C (95°F).

Note: To maximize the life of the battery, the computer does not recharge the battery if the remaining power is greater than 95%.

Use P-to-P 2.0 charging function

The USB-C connector (USB 3.1 Gen 1) on the computer feature the Lenovo-unique P-to-P 2.0 charging function. When no ac power is available, this feature enables one computer to supply power to another computer through a USB-C to USB-C cable.

Before using the function, ensure that:

- The selected connectors support the P-to-P 2.0 charging function and power delivery function.
- **Always On USB** and **Charge in Battery Mode** are enabled in UEFI BIOS of both computers, so that the function works even when the computers are off or in hibernation mode. To enable **Always On USB** and **Charge in Battery Mode**:
  1. Enter the UEFI BIOS menu. See “Enter the UEFI BIOS menu” on page 29.
  2. Click **Config → USB** to enable **Always On USB** and **Charge in Battery Mode**.

To use the function (when no ac power is available):

The remaining battery power of computer A should be at least 30% and be 3% higher than that of computer B. To check the battery status, see “Check the battery status and temperature” on page 21. Connect the

© Copyright Lenovo 2020

computers to each other with a USB-C to USB-C cable. In this situation, computer A works as the power supply. Once the remaining battery power of computer A is lower than 30%, computer A stops supplying power to computer B.

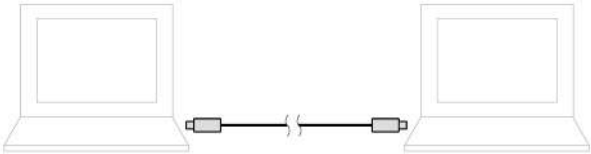

Note: The actual charging speed using the Lenovo-unique P-to-P 2.0 charging function varies depending on many factors, such as the remaining battery power of the computers and whether you are using the computers.

Maximize the battery life

- Lower the brightness of the computer display.
- Turn off the wireless features when not in use.
- Use the battery until the charge is depleted.
- Recharge the battery completely before using it.

Set power button behaviors

You can define what the power button does according to your preference. For example, by pressing the power button, you can turn off the computer or put the computer to sleep or hibernation mode.

To change what the power button does:

1. Right-click the battery status icon in the Windows notification area.
2. Click **Power Options** → **Choose what the power buttons do**.
3. Change the settings as you prefer.

Set the power plan

For ENERGY STAR® compliant computers, the following power plan takes effect when your computers have been idle for a specified duration:

Table 1. Default power plan (when plugged into ac power)

• Turn off the display: After 10 minutes • Put the computer to sleep: After 30 minutes

To reset the power plan to achieve the best balance between performance and power saving:

1. Right-click the battery status icon and select **Power Options**.
2. Choose or customize a power plan of your preference.

Airplane mode

When the Airplane mode is enabled, all wireless features are disabled.

To enable or disable the Airplane mode:

1. Open the **Start** menu.

2. Click **Settings** → **Network & Internet** → **Airplane mode**.
3. Turn on or turn off the **Airplane mode** switch.

Purchase options

Lenovo has a number of hardware accessories and upgrades to help expand the capabilities of your computer. Options include memory modules, storage devices, network cards, port replicators or docking stations, batteries, power adapters, keyboards, mice, and more.

To shop at Lenovo, go to https://www.lenovo.com/accessories.

Chapter 4. Secure your computer and information

Lock the computer

Lock your computer to a desk, table, or other fixtures through a compatible security cable lock.

Note: You are responsible for evaluating, selecting, and implementing the locking device and security feature. Lenovo makes no comments, judgments, or warranties about the function, quality, or performance of the locking device and security feature. Cable locks for your product are available from Lenovo at https://www.lenovoquickpick.com.

Use passwords

This section introduces types of passwords in UEFI (Unified Extensible Firmware Interface) BIOS (Basic Input/Output System) and how to set, change, and remove a password.

Password types

You can set a power-on password, supervisor password, system management password, or hard disk password in UEFI BIOS to prevent unauthorized access to your computer. However, you are not prompted to enter any UEFI BIOS password when your computer resumes from sleep mode.

Power-on password

If you set a power-on password, a window is displayed on the screen when you turn on the computer. Enter the correct password to use the computer.

Supervisor password

The supervisor password protects the system information stored in UEFI BIOS. When entering the UEFI BIOS menu, enter the correct supervisor password in the window prompted. You also can press Enter to

© Copyright Lenovo 2020

skip the password prompt. However, you cannot change most of the system configuration options in UEFI BIOS.

If you have set both the supervisor password and power-on password, you can use the supervisor password to access your computer when you turn it on. The supervisor password overrides the power-on password.

System management password

The system management password can also protect the system information stored in UEFI BIOS like a supervisor password, but it has lower authority by default. The system management password can be set through the UEFI BIOS menu or through Windows Management Instrumentation (WMI) with the Lenovo client-management interface.

You can enable the system management password to have the same authority as the supervisor password to control security related features. To customize the authority of the system management password through the UEFI BIOS menu:

1. Enter the UEFI BIOS menu. See “Enter the UEFI BIOS menu” on page 29.

   Note: When you are prompted to enter the password, enter the correct supervisor password if a supervisor password has been set, or enter the correct system management password if no supervisor password has been set. Otherwise, you cannot change the configurations in the following steps.
2. Select **Security → Password → System Management Password Access Control**.
3. Follow the on-screen instructions.

If you have set both the supervisor password and the system management password, the supervisor password overrides the system management password. If you have set both the system management password and the power-on password, the system management password overrides the power-on password.

Hard disk passwords

The hard disk password prevents unauthorized access to the data on the storage drive. When a hard disk password is set, you are prompted to type a correct password each time you try to access the storage drive.

To set the hard disk password, select one of the following types:

- **User hard disk password only**

  When a user hard disk password is set without a master hard disk password, the user must enter the user hard disk password to access files and applications on the storage drive.
- **Master hard disk password + User hard disk password**

  The master hard disk password is set and used by a system administrator. It enables the administrator to access any storage drive in a system or any computer connected in the same network. The administrator can also assign a user hard disk password for each computer in the network. The user of the computer can change the user hard disk password as desired, but only the administrator can remove the user hard disk password.

When prompted to enter a hard disk password, press F1 to switch between the master hard disk password and user hard disk password.

Note: The hard disk password is not available in the following situations:

- A Trusted Computing Group (TCG) Opal-compliant storage drive and a TCG Opal management software program are installed in the computer, and the TCG Opal management software program is activated.
- An eDrive storage drive is installed in the computer preinstalled with the Windows 10 operating system.

Set, change, and remove a password

Before you start, print these instructions.

1. Restart the computer. When the logo screen is displayed, press F1 to enter the UEFI BIOS menu.
2. Select **Security → Password** by using the arrow keys.
3. Select the password type. Then, follow the on-screen instructions to set, change, or remove a password.

You should record all your passwords and store them in a safe place. If you forget any of your passwords, any potential repair actions required are not covered under warranty.

What to do if you forget your power-on password

If you forget your power-on password, do the following to remove the power-on password:

- If you have set a supervisor password and remember it:
  1. Restart the computer. When the logo screen is displayed, immediately press F1.
  2. Type the supervisor password to enter the UEFI BIOS menu.
  3. Select **Security → Password → Power-On Password** by using the arrow keys.
  4. Type the current supervisor password in the **Enter Current Password** field. Then, leave the **Enter New Password** field blank, and press Enter twice.
  5. In the Changes have been saved window, press Enter.
  6. Press F10 to save changes and exit the UEFI BIOS menu.
- If you have not set a supervisor password, contact a Lenovo authorized service provider to have the power-on password removed.

What to do if you forget your hard disk password

If you forget your user hard disk password or both user and master hard disk passwords, Lenovo cannot reset your passwords or recover data from the storage drive. You can contact a Lenovo authorized service provider to have the storage drive replaced. A fee will be charged for parts and service. If the storage drive is a CRU (Customer Replaceable Unit), you can also contact Lenovo to purchase a new storage drive to replace the old one by yourself. To check whether the storage drive is a CRU and the relevant replacement procedure, see Chapter 6 “CRU replacement” on page 35.

What to do if you forget your supervisor password

If you forget your supervisor password, there is no service procedure to remove the password. You have to contact a Lenovo authorized service provider to have the system board replaced. A fee will be charged for parts and service.

What to do if you forget your system management password

If you forget your system management password, do the following to remove the system management password:

- If you have set a supervisor password and remember it:
  1. Restart the computer. When the logo screen is displayed, immediately press F1.
  2. Type the supervisor password to enter the UEFI BIOS menu.
  3. Select **Security → Password → System Management Password** by using the arrow keys.
  4. Type the current supervisor password in the **Enter Current Password** field. Then, leave the **Enter New Password** field blank, and press Enter twice.
  5. In the Changes have been saved window, press Enter.

6. Press F10 to save changes and exit the UEFI BIOS menu.

- If you have not set a supervisor password, contact a Lenovo authorized service provider to have the system management password removed.

Use the fingerprint reader (for selected models)

The fingerprint reader is combined with the power button on selected models. You can use it to enroll your fingerprints. After enrollment, you can tap your finger on the fingerprint reader to log in to Windows.

Enroll your fingerprints

Open the Start menu and then click **Settings** → **Accounts** → **Sign-in options**. Then, follow the on-screen instructions to finish the enrollment.

During the enrollment, the fingerprints are associated with the Windows password automatically. It is recommended that you put your finger in the center of the fingerprint reader during enrollment and enroll more than one fingerprint in case of any injuries to your fingers.

Log in with your fingerprint

When the fingerprint reader indicator is solid green, tap your finer on the fingerprint reader for authentication.

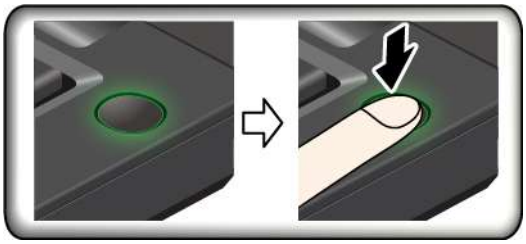

Maintain the fingerprint reader

To ensure that the fingerprint reader works correctly, do not:

- Scratch the surface of the reader with anything hard.
- Use or touch the reader with a wet, dirty, wrinkled, or injured finger.

Use firewalls and antivirus programs

Your computer might be preinstalled with a firewall program. The firewall protects against computer Internet security threats, unauthorized access, intrusions, and Internet attacks. It also protects your privacy.

A full version of antivirus program is provided with a free 30-day subscription. After 30 days, you must renew the license to continue receiving the antivirus program updates.

For more information, see the help system of the program.

Chapter 5. Configure advanced settings

This chapter provides information about UEFI BIOS, RAID, recovery, operating system installation, and system management.

UEFI BIOS

This section introduces what is UEFI BIOS and the operations you can perform in UEFI BIOS.

What is UEFI BIOS

UEFI BIOS is the first program that the computer runs when the computer is turned on. UEFI BIOS initializes the hardware components and loads the operating system and other programs. Your computer comes with a setup program with which you can change UEFI BIOS settings.

Enter the UEFI BIOS menu

Restart the computer. When the logo screen is displayed, press F1 to enter the UEFI BIOS menu.

Note: If you have set the supervisor password, enter the correct password when prompted. You also can press Enter to skip the password prompt and enter the UEFI BIOS menu. However, you cannot change the system configurations that are protected by the supervisor password.

Navigate in the UEFI BIOS interface

Attention: The default configurations are already optimized for you in **boldface**. Improper change of the configurations might cause unexpected results.

You can navigate in the UEFI BIOS interface by pressing the following keys:

F1	Display the General Help screen.
F9	Restore to the default settings.
F10	Save your configuration and exit.
F5 / –	Change to a lower value.
F6 / +	Change to a higher value.
↑ ↓	Locate an item.
← →	Select a tab.
Esc	Exit the submenu and return to the parent menu.
Enter	Enter the selected tab or submenu.

Change the startup sequence

1. Restart the computer. When the logo screen is displayed, press F1.
2. Select **Startup → Boot**. Then, press Enter. The default device order list is displayed.

   Note: No bootable device is displayed if the computer cannot start from any devices or the operating system cannot be found.
3. Set the startup sequence as desired.

© Copyright Lenovo 2020

4. Press F10 to save the changes and exit.

To change the startup sequence temporarily:

1. Restart the computer. When the logo screen is displayed, press F12.
2. Select the device that you want the computer to start from and press Enter.

Set the system date and time

1. Restart the computer. When the logo screen is displayed, press F1.
2. Select **Date/Time** and set the system date and time as desired.
3. Press F10 to save changes and exit.

Update UEFI BIOS

When you install a new program, device driver, or hardware component, you might need to update UEFI BIOS.

Download and install the latest UEFI BIOS update package by one of the following methods:

- Open Lenovo Vantage to check the available update packages. If the latest UEFI BIOS update package is available, follow the on-screen instructions to download and install the package.
- Go to https://pcsupport.lenovo.com and select the entry for your computer. Then, follow the on-screen instructions to download and install the latest UEFI BIOS update package.

Recovery information

This section introduces the recovery information of the Windows 10 operating system. Ensure that you read and follow the on-screen recovery instructions. The data on your computer might be deleted during the recovery process. To avoid data loss, make a backup copy of all the data that you want to keep.

Restore system files and settings to an earlier point

1. Go to **Control Panel** and view by Large icons or Small icons.
2. Click **Recovery** → **Open System Restore**. Then, follow the on-screen instructions.

Restore your files from a backup

Note: If you use the File History tool to restore your files from a backup, ensure that you backed up your data earlier with the tool.

1. Go to **Control Panel** and view by Large icons or Small icons.
2. Click **File History** → **Restore personal files**. Then, follow the on-screen instructions.

Reset your computer

In the resetting process, you can choose to keep your files or remove them when you reinstall the operating system.

Note: The items in the graphical user interface (GUI) might change without notice.

1. Open the **Start** menu, and then click **Settings** → **Update & Security** → **Recovery**.
2. In the **Reset this PC** section, click **Get started**.
3. Follow the on-screen instructions to reset your computer.

Use advanced options

Note: The items in the graphical user interface (GUI) might change without notice.

1. Open the **Start** menu, and then click **Settings** → **Update & security** → **Recovery**.
2. In the **Advanced startup** section, click **Restart now** → **Troubleshoot** → **Advanced options**.
3. Select a preferred option, and then follow the on-screen instructions.

Windows automatic recovery

Note: Ensure that your computer is connected to ac power during the recovery process.

The Windows recovery environment on your computer operates independently from the Windows 10 operating system. It enables you to recover or repair the operating system even if the Windows 10 operating system fails to start.

After two consecutive failed boot attempts, the Windows recovery environment starts automatically. Then you can choose repair and recovery options by following the on-screen instructions.

Create and use a recovery USB device

It is recommended that you create a recovery USB drive as early as possible as a backup for the Windows recovery programs. With the recovery USB drive, you can troubleshoot and fix the problems even if the preinstalled Windows recovery programs are damaged. If you did not create a recovery USB drive as a precautionary measure, you can contact Lenovo Customer Support Center and purchase one from Lenovo. For a list of the Lenovo Support phone numbers for your country or region, go to:

https://pcsupport.lenovo.com/supportphonelist

Create a recovery USB drive

Attention: The creation process deletes anything stored on the USB drive. To avoid data loss, make a backup copy of all the data that you want to keep.

1. Ensure that your computer is connected to ac power.
2. Prepare a USB drive with at least 16 GB of storage capacity. The actual USB capacity required depends on the size of the recovery image.
3. Connect the prepared USB drive to the computer.
4. Type `recovery` in the search box. Then, click **Create a recovery drive**.
5. Click **Yes** in the User Account Control window to allow the Recovery Media Creator program to start.
6. In the Recovery Drive window, follow the on-screen instructions to create a recovery USB drive.

Use the recovery USB drive

1. Ensure that your computer is connected to ac power.
2. Connect the recovery USB drive to the computer.
3. Turn on or restart the computer. When the logo screen is displayed, press F12. The Boot Menu window opens.
4. Select the recovery USB drive as the boot device. Then, follow the on-screen instructions to complete the process.

Install Windows 10 and drivers

This section provides instructions on installing a Windows 10 operating system and device drivers.

Install a Windows 10 operating system

Microsoft constantly makes updates to the Windows 10 operating system. Before installing a particular Windows 10 version, check the compatibility list for the Windows version. For details, go to https://support.lenovo.com/us/en/solutions/windows-support.

Attention:

- It is recommended that you update your operating system through official channels. Any unofficial update might cause security risks.
- The process of installing a new operating system deletes all the data on your internal storage drive, including the data stored in a hidden folder.
- For computer models that are installed with Intel Optane memory, ensure that you don't install the operating system into Optane memory.

1. If you are using the Windows BitLocker Drive Encryption feature and your computer has a Trusted Platform Module, ensure that you have disabled the feature.
2. Ensure that the security chip is set to **Active**.
   a. Restart the computer. When the logo screen is displayed, press F1 to enter the UEFI BIOS menu.
   b. Select **Security** → **Security Chip** and press Enter. The **Security Chip** submenu opens.
   c. Ensure that the security chip for TPM 2.0 is set to **Active**.
   d. Press F10 to save the settings and exit.
3. For computer models that are installed with Intel Optane memory, enter the UEFI BIOS menu and select **Config** → **Storage** → **Controller mode**. Ensure that **RST mode** is selected.
4. Connect the drive that contains the operating system installation program to the computer.
5. Restart the computer. When the logo screen is displayed, press F1 to enter the UEFI BIOS menu.
6. Select **Startup** → **Boot** to display the **Boot Priority Order** submenu.
7. Select the drive that contains the operating system installation program, for example, **USB HDD**. Then, press Esc.

   Attention: After you change the startup sequence, ensure that you select the correct device during a copy, a save, or a format operation. If you select the wrong device, the data on that device might be erased or overwritten.
8. Select **Restart** and ensure that **OS Optimized Defaults** is enabled. Then, press F10 to save the settings and exit.
9. Follow the on-screen instructions to install the device drivers and necessary programs.
10. After installing the device drivers, apply Windows Update to get the latest updates, for example the security patches.
11. Go to Microsoft Store to download and install the latest version of Lenovo Vantage.

For computer models that are installed with Intel Optane memory, continue to enable the Intel Optane memory by doing the following:

1. Go to https://support.lenovo.com. Download and install the Intel Rapid Storage Technology (iRST) Driver on your computer.
2. Go to Microsoft Store to download and install **Intel Optane Memory and Storage Management** program.
3. Launch the program. Click **Intel Optane Memory** → **Enable Intel Optane Memory**, and then follow the instructions on the screen to enable it.

Install device drivers

You should download the latest driver for a component when you notice poor performance from that component or when you added a component. This action might eliminate the driver as the potential cause of a problem. Download and install the latest driver by one of the following methods:

- Open Lenovo Vantage to check the available update packages. Select the update packages you want, and then follow the on-screen instructions to download and install the packages.
- Go to https://support.lenovo.com and select the entry for your computer. Then, follow the on-screen instructions to download and install necessary drivers and software.

Chapter 6. CRU replacement

What are CRUs

Customer Replaceable Units (CRUs) are parts that can be upgraded or replaced by the customer. The computers contain the following types of CRUs:

- **Self-service CRUs:** Refer to parts that can be installed or replaced easily by customer themselves or by trained service technicians at an additional cost.
- **Optional-service CRUs:** Refer to parts that can be installed or replaced by customers with a greater skill level. Trained service technicians can also provide service to install or replace the parts under the type of warranty designated for the customer's machine.

If you intend on installing a CRU, Lenovo will ship the CRU to you. CRU information and replacement instructions are shipped with your product and are available from Lenovo at any time upon request. You might be required to return the defective part that is replaced by the CRU. When return is required: (1) return instructions, a prepaid shipping label, and a container will be included with the replacement CRU; and (2) you might be charged for the replacement CRU if Lenovo does not receive the defective CRU within thirty (30) days of your receipt of the replacement CRU. For full details, see the Lenovo Limited Warranty documentation at https://www.lenovo.com/warranty/llw_02.

Refer to the following CRU list for your computer.

Self-service CRUs

- ac power adapter
- Power cord

Optional-service CRUs

- Base cover assembly
- Memory module
- Hard disk drive*
- Hard disk drive bracket*
- Hard disk drive cable*
- M.2 solid-state drive*
- M.2 solid-state drive bracket*
- Speaker assembly

* for selected models

Disable Fast Startup and the built-in battery

Before replacing any CRU, ensure that you disable Fast Startup first and then disable the built-in battery.

To disable Fast Startup:

1. Go to **Control Panel** and view by Large icons or Small icons.
2. Click **Power Options**, and then click **Choose what the power buttons do** on the left pane.
3. Click **Change settings that are currently unavailable** at the top.

© Copyright Lenovo 2020

4. If prompted by User Account Control (UAC), click **Yes**.
5. Clear the **Turn on fast startup** check box, and then click **Save changes**.

To disable the built-in battery:

1. Restart your computer. When the logo screen is displayed, immediately press F1 to enter the UEFI BIOS menu.
2. Select **Config** → **Power**. The **Power** submenu is displayed.
3. Select **Disable Built-in Battery** and press Enter.
4. Select **Yes** in the Setup Confirmation window. The built-in battery is disabled and the computer turns off automatically. Wait three to five minutes to let the computer cool.

Replace a CRU

Follow the replacement procedure to replace a CRU.

Base cover assembly

Prerequisite

Before you start, read Appendix A “Important safety information” on page 57 and print the following instructions.

Notes: Do not remove the base cover assembly in the following situations. Otherwise, there might be a risk of short circuits.

- When your computer has the removable battery installed
- When your computer is connected to ac power

Replacement procedure (E14/R14/S3 Gen 2)

1. Disable the built-in battery. See “Disable Fast Startup and the built-in battery” on page 35.
2. Turn off the computer and disconnect the computer from ac power and all connected cables.
3. Close the computer display and turn over the computer.

4. Loosen the screws that secure the base cover assembly 1 and pry up the latches 2. Then, remove the base cover assembly 3.

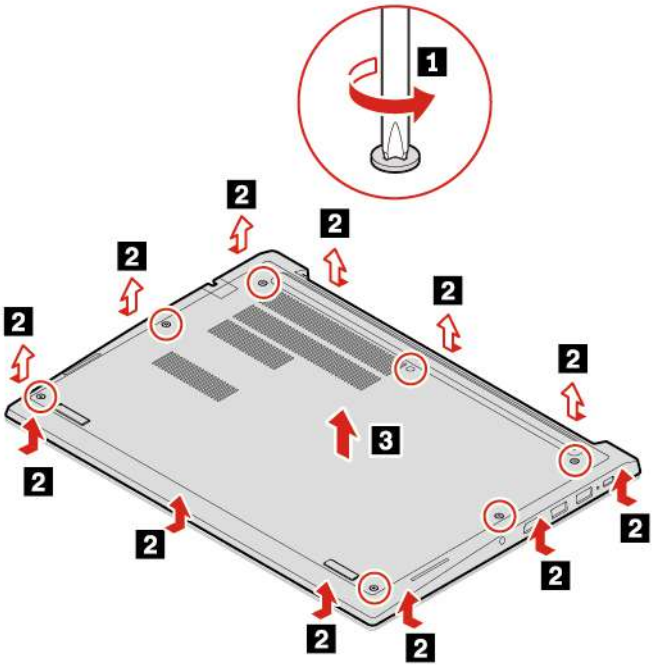

5. Install the new base cover assembly in place 1. Ensure that the latches of the base cover assembly are secured under the base cover assembly 2. Then, tighten the screws to secure the base cover assembly 3.

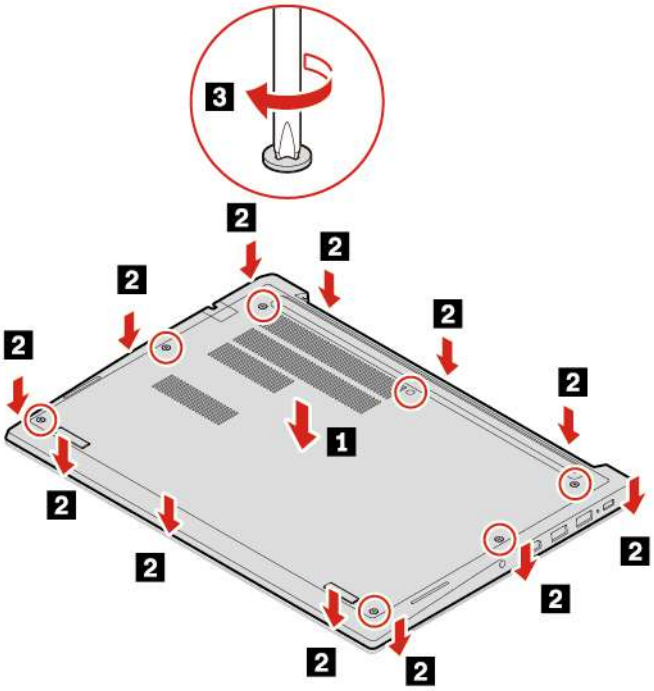

6. Turn over the computer. Connect the ac power adapter and all disconnected cables to the computer.

Replacement procedure (E15)

1. Disable the built-in battery. See “Disable Fast Startup and the built-in battery” on page 35.
2. Turn off the computer and disconnect the computer from ac power and all connected cables.
3. Close the computer display and turn over the computer.
4. Loosen the screws that secure the base cover assembly 1 and pry up the latches 2. Then, remove the base cover assembly 3.

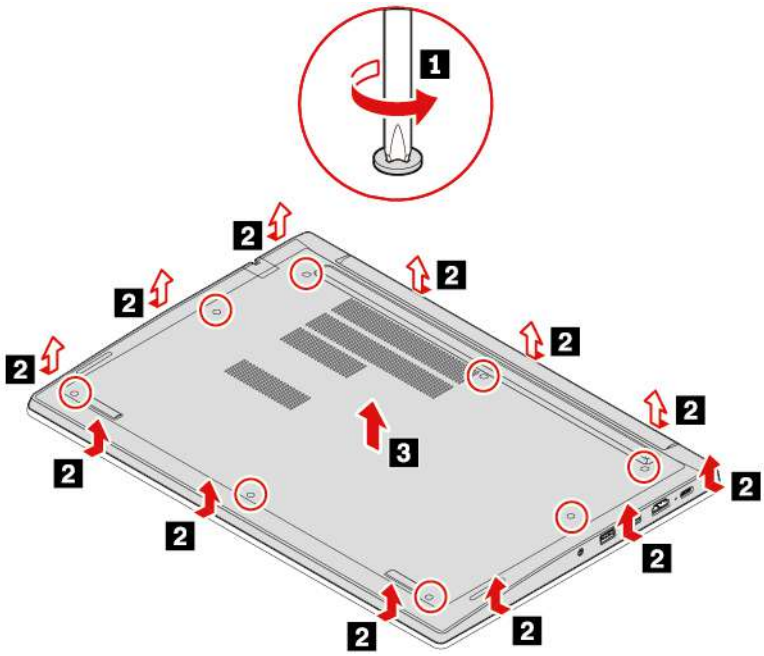

5. Install the new base cover assembly in place 1. Ensure that the latches of the base cover assembly are secured under the base cover assembly 2. Then, tighten the screws to secure the base cover assembly 3.

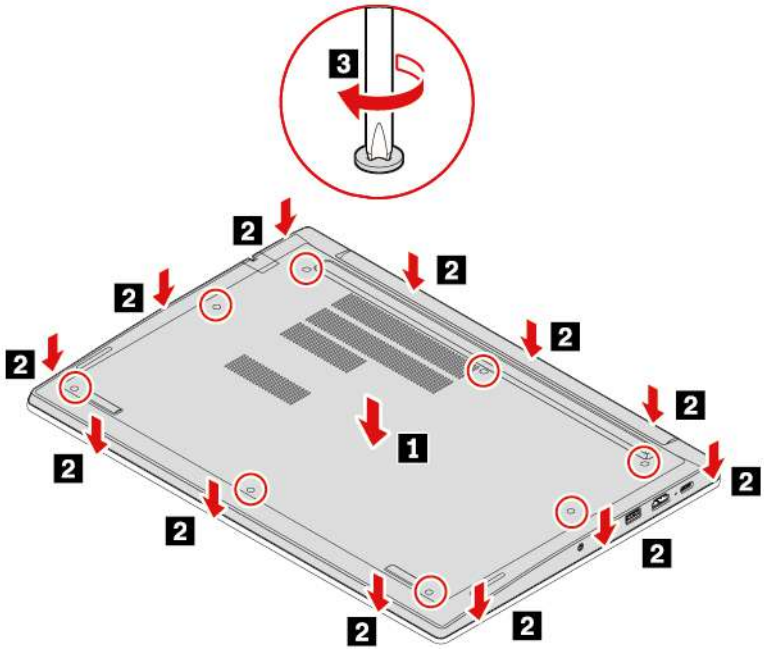

6. Turn over the computer. Connect the ac power adapter and all disconnected cables to the computer.

Troubleshooting

If the computer does not start up after you reinstall the base cover assembly, disconnect the ac power adapter and then reconnect it to the computer.

Memory module

Prerequisite

Before you start, read Appendix A “Important safety information” on page 57 and print the following instructions.

Attention: Do not touch the contact edge of the memory module. Otherwise, the memory module might get damaged.

Replacement procedure

To replace a memory module:

1. Disable the built-in battery. See “Disable Fast Startup and the built-in battery” on page 35.
2. Turn off the computer and disconnect the computer from ac power and all connected cables.
3. Close the computer display and turn the computer over.
4. Remove the base cover assembly. See “Base cover assembly” on page 36.
5. Open the latches on both sides of the memory module slot at the same time 1, and then remove the memory module 2.

   Note: A Mylar film might cover the memory module. To access the memory module, peel off the film first.

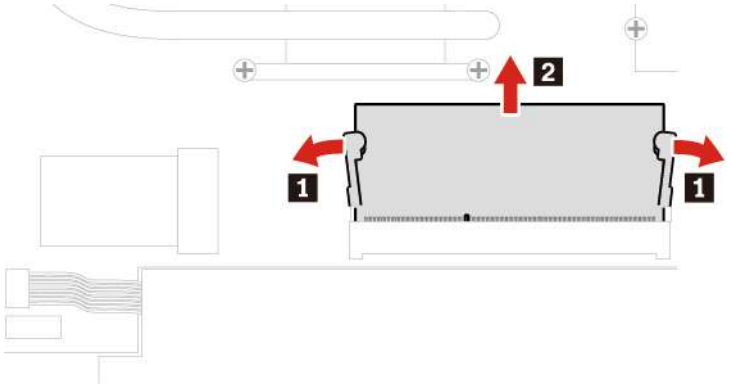

6. Install a new memory module:
   a. Place the notched end of the new memory module toward the contact edge side of the memory slot. Then, insert the new memory module into the memory slot at an angle of about 20 degrees 1.
   b. Pivot the memory module downward until it snaps into place 2. Ensure that the memory module is firmly installed in the memory slot and cannot be moved easily.

   Note: If your computer is installed with only one memory module, ensure that the memory module is installed in the memory slot next to the thermal fan assembly.

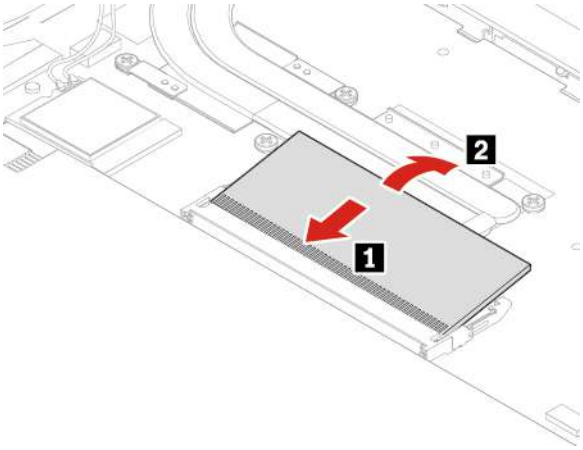

7. Reinstall the base cover assembly.
8. Turn over the computer. Connect the ac power adapter and all disconnected cables to the computer.

Internal storage drive

Prerequisite

Before you start, read Appendix A “Important safety information” on page 57 and print the following instructions.

Attention: The internal storage drive is sensitive. Inappropriate handling might cause damage and permanent loss of data.

When handling the internal storage drive, observe the following guidelines:

- Replace the internal storage drive only for upgrade or repair. The internal storage drive is not designed for frequent changes or replacement.
- Before replacing the internal storage drive, make a backup copy of all the data that you want to keep.
- Do not touch the contact edge of the internal storage drive. Otherwise, the internal storage drive might get damaged.
- Do not apply pressure to the internal storage drive.
- Do not make the internal storage drive subject to physical shocks or vibration. Put the internal storage drive on a soft material, such as cloth, to absorb physical shocks.

Replacement procedure

1. Disable the built-in battery. See “Disable Fast Startup and the built-in battery” on page 35.
2. Turn off the computer and disconnect the computer from ac power and all connected cables.
3. Close the computer display and turn the computer over.

4. Remove the base cover assembly. See “Base cover assembly” on page 36.
5. Disconnect the cable from the system board and pull the tape to remove the storage drive.

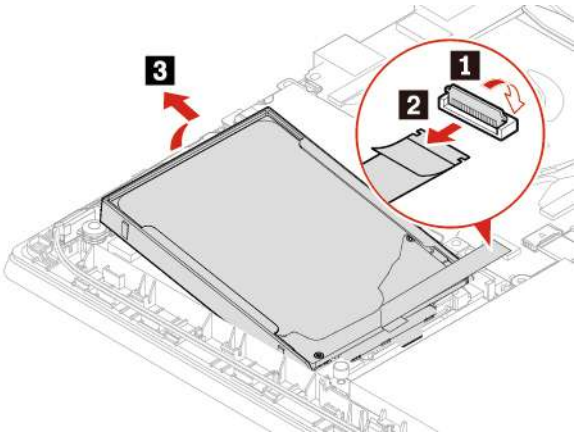

6. Disconnect the cable from the storage drive.

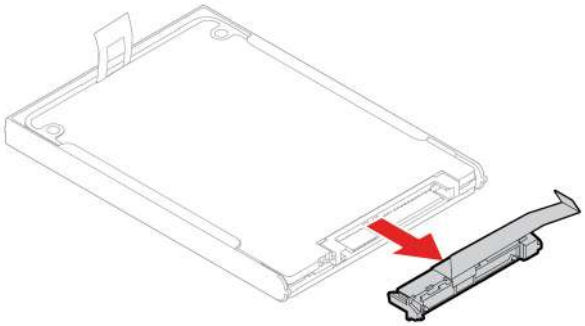

7. Detach the bracket from the storage drive.

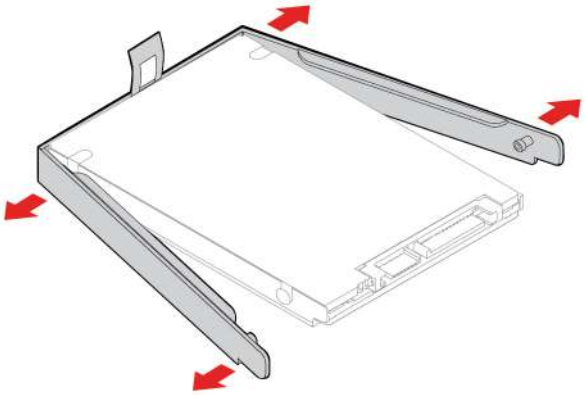

8. Attach the bracket to a new storage drive.

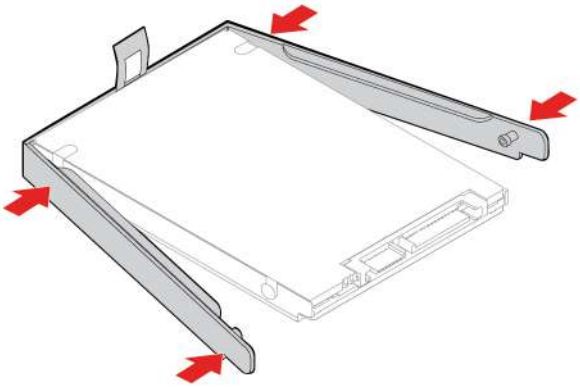

9. Connect the cable to the storage drive.

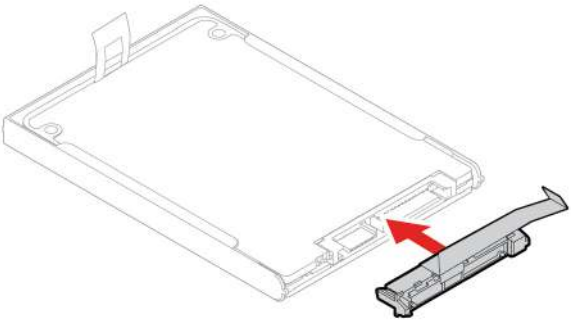

10. Insert the new storage drive 1 and then pivot it downward 2. Ensure that the new storage drive is seated in place. Then, attach the connector to the system board 3 and 4.

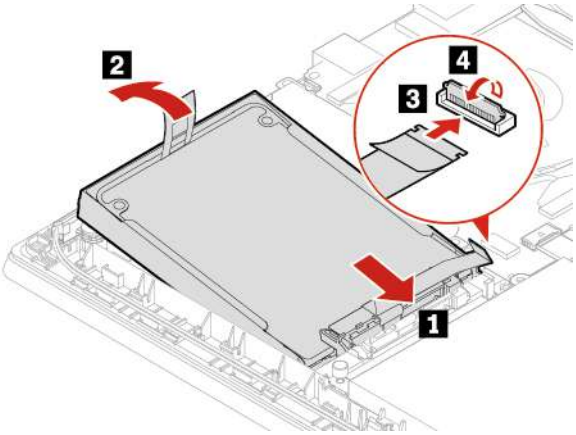

11. Connect the cable to the system board.
12. Reinstall the base cover assembly.
13. Turn over the computer. Connect the ac power adapter and all disconnected cables.

M.2 solid-state drive

Prerequisite

Before you start, read Appendix A “Important safety information” on page 57 and print the following instructions.

Attention: If you replace a M.2 solid-state drive, you might need to install a new operating system. For details on how to install a new operating system, see “Install Windows 10 and drivers” on page 31.

The M.2 solid-state drive is sensitive. Inappropriate handling might cause damage and permanent loss of data.

When handling the M.2 solid-state drive, observe the following guidelines:

- Replace the M.2 solid-state drive only for upgrade or repair. The M.2 solid-state drive is not designed for frequent changes or replacement.
- Before replacing the M.2 solid-state drive, make a backup copy of all the data that you want to keep.
- Do not apply pressure to the M.2 solid-state drive.
- Do not touch the contact edge or circuit board of the M.2 solid-state drive. Otherwise the M.2 solid-state drive might get damaged.
- Do not make the M.2 solid-state drive subject to physical shocks or vibration. Put the M.2 solid-state drive on a soft material, such as cloth, to absorb physical shocks.

Replacement procedure (short M.2 solid-state drive)

1. Disable the built-in battery. See “Disable Fast Startup and the built-in battery” on page 35.
2. Turn off the computer and disconnect the computer from ac power and all connected cables.
3. Close the computer display and turn the computer over.
4. Remove the base cover assembly. See “Base cover assembly” on page 36.
5. Remove the screws that secure the long M.2 solid-state drive bracket 1 and remove the bracket 2.

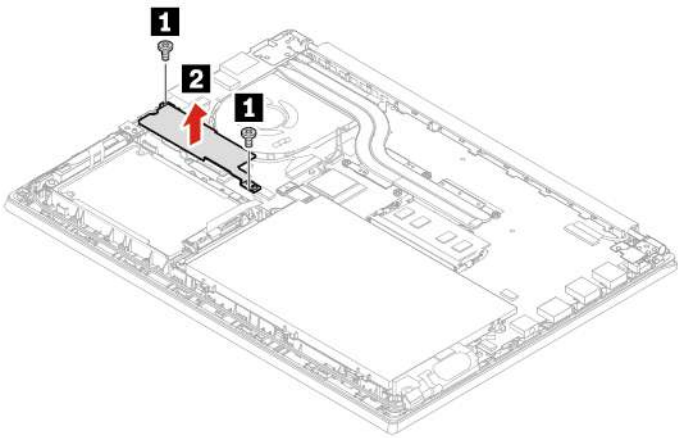

Note: Two thermal pads are attached underneath the long bracket to prevent possible overheating. Ensure that the thermal pads are not removed or damaged.

6. Remove the screw 1. Carefully remove the M.2 solid-state drive assembly out of the slot 2.

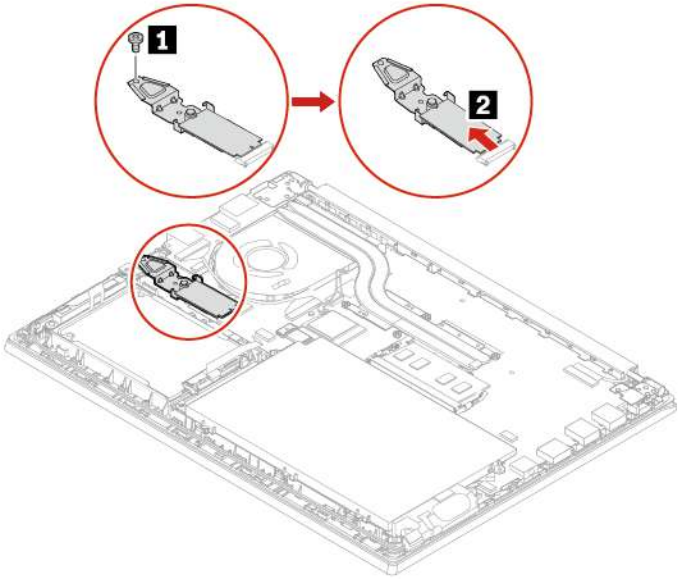

7. Take the M.2 solid-state drive out of the bracket.

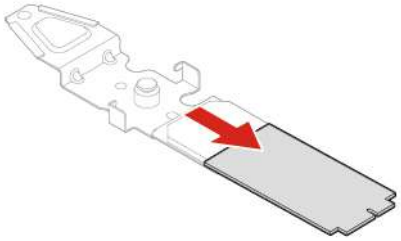

8. Put the new M.2 solid-state drive into the bracket.

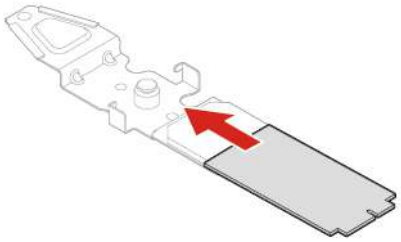

9. Align the contact edge of the new M.2 solid-state drive assembly with the key in the slot and carefully insert the drive into the slot at an angle of about 20 degrees 1. Then, pivot the M.2 solid-state drive assembly downward 2. Tighten the screw 3.

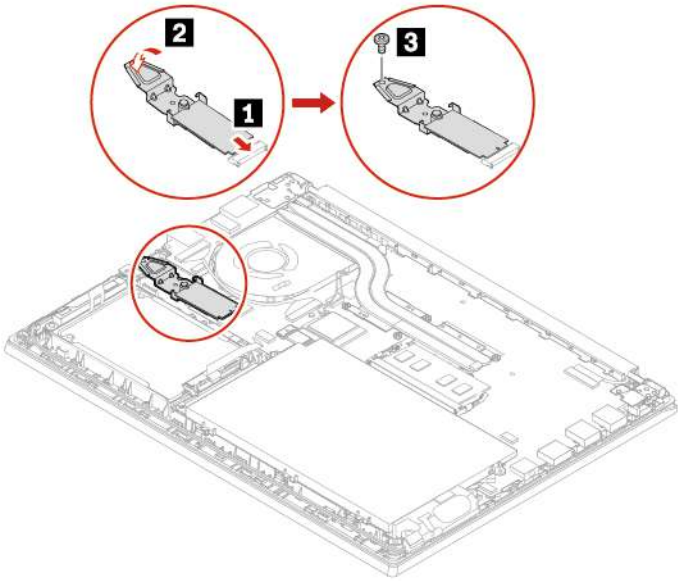

10. Install the long M.2 solid-state drive bracket 1 and then tighten the screws 2.

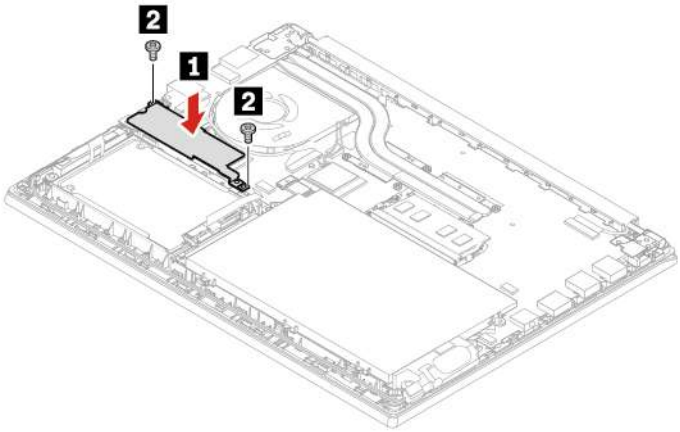

Note: Two thermal pads are attached underneath the long bracket to prevent possible overheating. Ensure that the thermal pads are not removed or damaged.

11. Reinstall the base cover assembly.
12. Turn the computer over. Connect the ac power adapter and all disconnected cables to the computer.

Replacement procedure (long M.2 solid-state drive)

1. If you are going to replace an Intel Optane memory, disable the Intel Optane memory by doing the following:
   a. Restart the computer. When the logo screen is displayed, press F1.

      Note: If a supervisor password has been set, enter the correct password when prompted. You also can press Enter to skip the password prompt and enter the BIOS menu. However, you cannot change the system configurations that are protected by the supervisor password.

b. Select **Config → Storage → Intel (R) Rapid Storage Technology → Intel Optane → Disable**.
c. Select to preserve user data and select **Yes** to confirm your operation.
d. Select **Disable** and wait for the process to complete.

Note: It might take a couple of minutes or even hours to complete the disabling process. Do not restart the computer until the process is completed.

e. Press F10 to save changes and exit.

2. Disable the built-in battery. See “Disable Fast Startup and the built-in battery” on page 35.
3. Turn off the computer and disconnect the computer from ac power and all connected cables.
4. Close the computer display and turn the computer over.
5. Remove the base cover assembly. See “Base cover assembly” on page 36.
6. Remove the screws that secure the long M.2 solid-state drive bracket 1 and then remove the bracket 2.

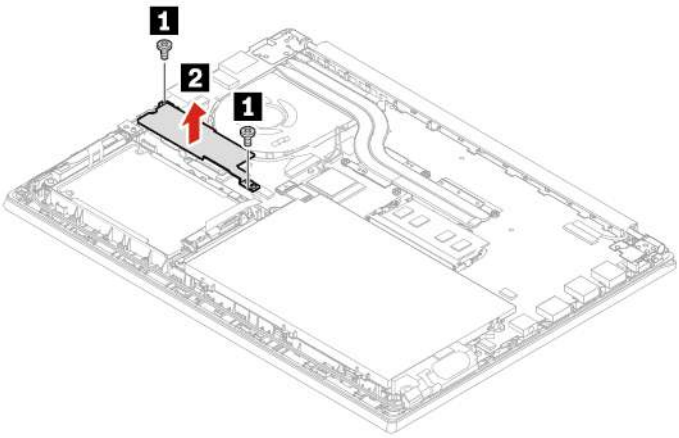

Note: Two thermal pads are attached underneath the long bracket to prevent possible overheating. Ensure that the thermal pads are not removed or damaged.

7. Remove the screw that secures the M.2 solid-state drive 1 and then the drive pivots upward. Carefully remove the drive out of the slot 2.

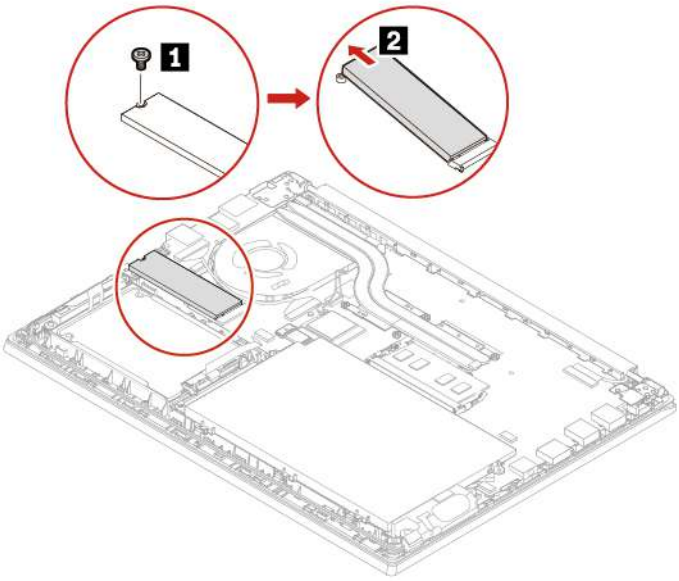

8. Install a new M.2 solid-state drive by doing the following:

   Note: Before installing a new M.2 solid-state drive, ensure that you install the rubber in place first.

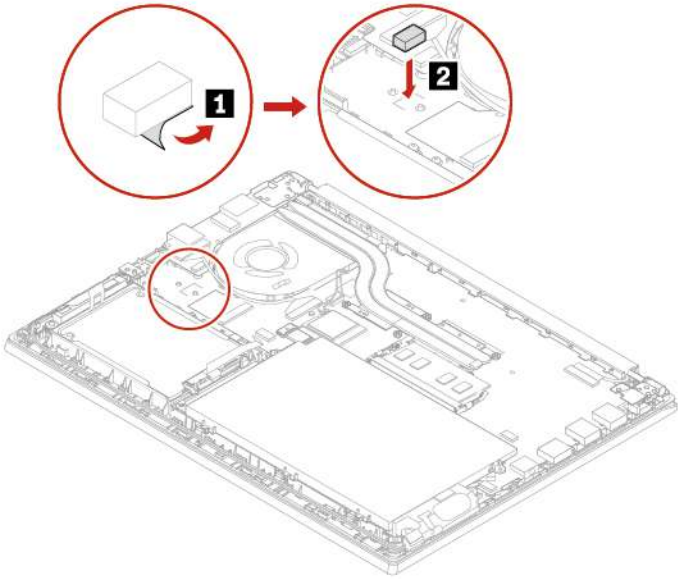

   a. Align the contact edge of the new M.2 solid-state drive with the key in the slot and carefully insert the drive into the slot at an angle of about 20 degrees 1. Then, pivot the M.2 solid-state drive downward 2.

   b. Install the screw to secure the M.2 solid-state drive 3.

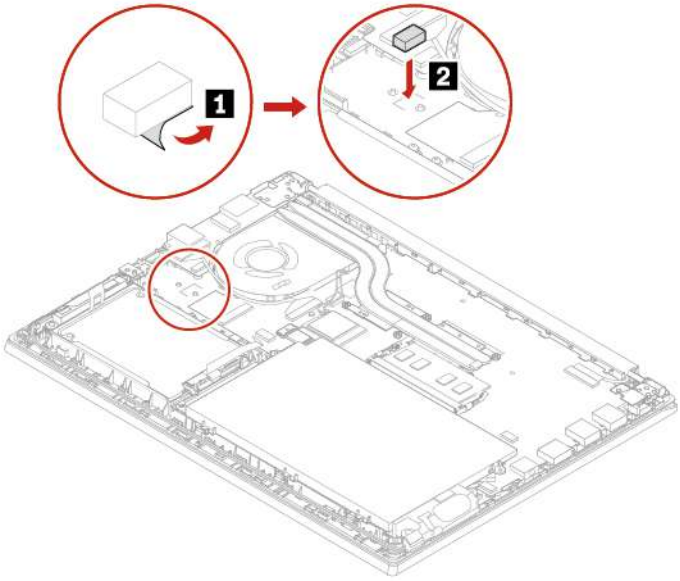

9. Install the new M.2 solid-state drive bracket 1 and tighten the screws 2.

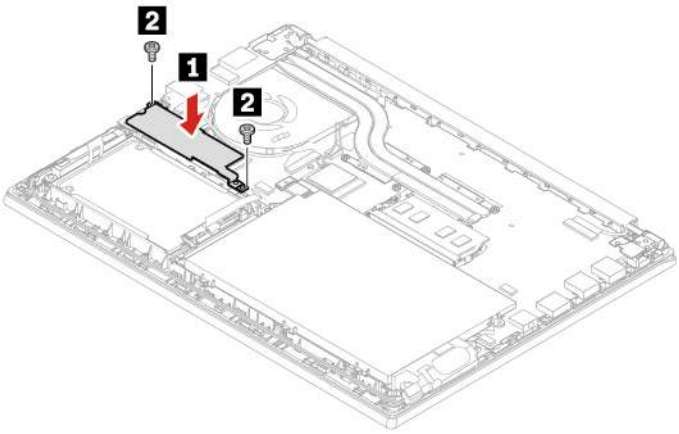

Note: Two thermal pads are attached underneath the long bracket to prevent possible overheating. Ensure that the thermal pads are not removed or damaged.

10. Reinstall the base cover assembly.
11. Turn the computer over. Connect the ac power adapter and all disconnected cables to the computer.

Speaker assembly

Prerequisite

Before you start, read Appendix A “Important safety information” on page 57 and print the following instructions.

Replacement procedure

1. Disable the built-in battery. See “Disable Fast Startup and the built-in battery” on page 35.
2. Turn off the computer and disconnect the computer from ac power and all connected cables.
3. Close the computer display and turn the computer over.
4. Remove the base cover assembly. See “Base cover assembly” on page 36.
5. Remove the speaker 1 first and release the speaker cables 2. Then, remove the speaker 3 and detach the connector of the speaker assembly 4.

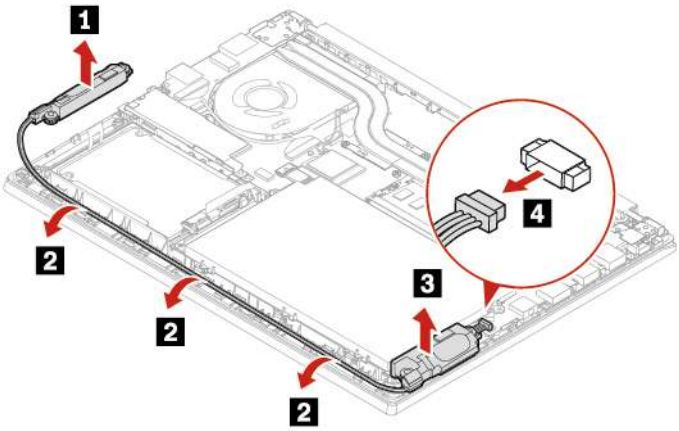

6. Attach the connector of the speaker assembly 1. Install the new speaker 2 in place first and route the speaker cables 3. Then, install the speaker 4.

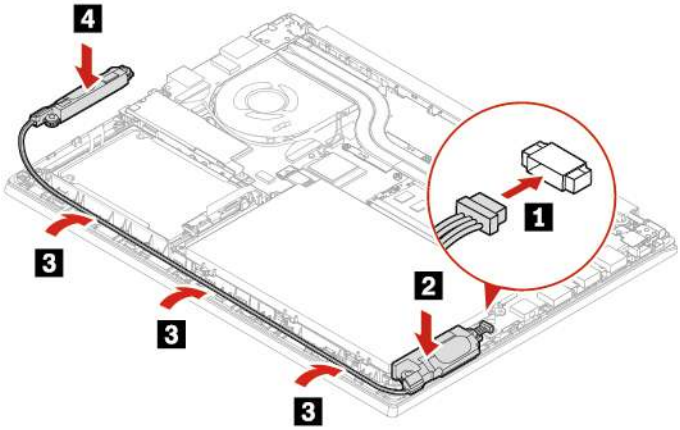

7. Reinstall the base cover assembly.
8. Turn over the computer. Connect the ac power adapter and all disconnected cables to the computer.

Chapter 7. Help and support

Frequently asked questions

How do I access Control Panel?	• Open the Start menu and click **Windows System** → **Control Panel**. • Use Windows Search.
How do I turn off my computer?	Open the Start menu and click ⏻ **Power**. Then, click **Shut down**.
How do I partition my storage drive?	https://support.lenovo.com/solutions/ht503851
What do I do if my computer stops responding.	1. Press and hold the power button until the computer turns off. Then, restart the computer. 2. If step 1 does not work: • For models with an emergency reset hole: Insert a straightened paper clip into the emergency reset hole to cut off power supply temporarily. Then, restart the computer with ac power connected. • For models without an emergency reset hole: – For models with the removable battery, remove the removable battery and disconnect all power sources. Then, reconnect to ac power and restart the computer. – For models with the built-in battery, disconnect all power sources. Press and hold the power button for about seven seconds. Then, reconnect to ac power and restart the computer.
What do I do if I spill liquid on the computer?	1. Carefully unplug the ac power adapter and turn off the computer immediately. The more quickly you stop the current from passing through the computer the more likely you will reduce damage from short circuits. **Attention:** Although you might lose some data or work by turning off the computer immediately, leaving the computer on might make your computer unusable. 2. Do not try to drain out the liquid by turning over the computer. If your computer has keyboard drainage holes on the bottom, the liquid will be drained out through the holes. 3. Wait until you are certain that all the liquid is dry before turning on your computer.
How do I enter the UEFI BIOS menu?	Restart the computer. When the logo screen is displayed, press F1 to enter the UEFI BIOS menu.
How do I disable my trackpad?	1. Open the Start menu, and then click **Settings** → **Devices** → **Touchpad**. 2. In the Touchpad section, turn off the **Touchpad** control.
Where can I get the latest device drivers and UEFI BIOS?	• From Lenovo Vantage. See “Install Windows 10 and drivers” on page 31 and “Update UEFI BIOS” on page 30. • Download from Lenovo Support Web site at https://support.lenovo.com.

© Copyright Lenovo 2020

Error messages

If you see a message that is not included in the following table, record the error message first, then shut down the computer and call Lenovo for help. See “Lenovo Customer Support Center” on page 55.

Message	Solution
0190: Critical low-battery error	The computer turned off because the battery power is low. Connect the ac power adapter to the computer and charge the batteries.
0191: System Security - Invalid remote change requested	The system configuration change has failed. Confirm the operation and try again.
0199: System Security - Security password retry count exceeded.	This message is displayed when you enter a wrong supervisor password more than three times. Confirm the supervisor password and try again.
0271: Check Date and Time settings.	The date or the time is not set in the computer. Enter the UEFI BIOS menu and set the date and time.
210x/211x: Detection/Read error on HDDx/SSDx	The storage drive is not working. Reinstall the storage drive. If the problem still exists, replace the storage drive.
Error: The non-volatile system UEFI variable storage is nearly full.	**Note:** This error indicates that the operating system or programs cannot create, modify, or delete data in the non-volatile system UEFI variable storage due to insufficient storage space after POST. The non-volatile system UEFI variable storage is used by the UEFI BIOS and by the operating system or programs. This error occurs when the operating system or programs store large amounts of data in the variable storage. All data needed for POST, such as UEFI BIOS setup settings, chipset, or platform configuration data, are stored in a separate UEFI variable storage. Press F1 after the error message is displayed to enter the UEFI BIOS menu. A dialog asks for confirmation to clean up the storage. If you select “Yes”, all data that were created by the operating system or programs will be deleted except global variables defined by the Unified Extensible Firmware Interface Specification. If you select “No”, all data will be kept, but the operating system or programs will not be able to create, modify, or delete data in the storage. If this error happens at a service center, Lenovo authorized service personnel will clean up the non-volatile system UEFI variable storage using the preceding solution.
Fan error. Press ESC to startup with limited performance.	The thermal fan might not work correctly. After the error message is displayed, press ESC within five seconds to start up the computer with limited performance. Otherwise, the computer will shut down immediately. If the problem still exists when you starts up next time, have your computer serviced.

Beep errors

Lenovo SmartBeep technology enables you to decode beep errors with your smartphone when a black screen occurs with beeps from your computer. To decode the beep error with Lenovo SmartBeep technology:

1. Go to https://support.lenovo.com/smartbeep or scan the following QR Code.
2. Download the proper diagnostic app and install it on your smartphone.
3. Run the diagnostic app and place the smartphone near the computer.
4. Press Fn on your computer to emit the beep again. The diagnostic app decodes the beep error and shows possible solutions on the smartphone.

Note: Do not attempt to service a product yourself unless instructed to do so by the Customer Support Center or product documentation. Only use a Lenovo-authorized service provider to repair your product.

Self-help resources

Use the following self-help resources to learn more about the computer and troubleshoot problems.

Resources	How to access?
Use Lenovo Vantage to: • Configure device settings. • Download and install UEFI BIOS, drivers, and firmware updates. • Secure your computer from outside threats. • Diagnose hardware problems. • Check the computer warranty status. • Access *User Guide* and helpful articles.	• Open the Start menu and click **Lenovo Vantage**. • Use Windows Search.
Product documentation: • *Safety and Warranty Guide* • *Setup Guide* • This *User Guide* • *Regulatory Notice*	Go to https://pcsupport.lenovo.com. Then, follow the on-screen instructions to filter out the documentation you want.
Lenovo Support Web site with the latest support information of the following: • Drivers and software • Diagnostic solutions • Product and service warranty • Product and parts details • Knowledge base and frequently asked questions	https://pcsupport.lenovo.com
Windows help information	• Open the Start menu and click **Get Help** or **Tips**. • Use Windows Search or the Cortana® personal assistant. • Microsoft support Web site: https://support.microsoft.com

Call Lenovo

If you have tried to correct the problem yourself and still need help, you can call Lenovo Customer Support Center.

Before you contact Lenovo

Prepare the following before you contact Lenovo:

1. Record the problem symptoms and details:
   - What is the problem? Is it continuous or intermittent?
   - Any error message or error code?
   - What operating system are you using? Which version?
   - Which software applications were running at the time of the problem?

- Can the problem be reproduced? If so, how?

2. Record the system information:
   - Product name
   - Machine type and serial number

     The following illustration shows where to find the machine type and serial number of your computer.

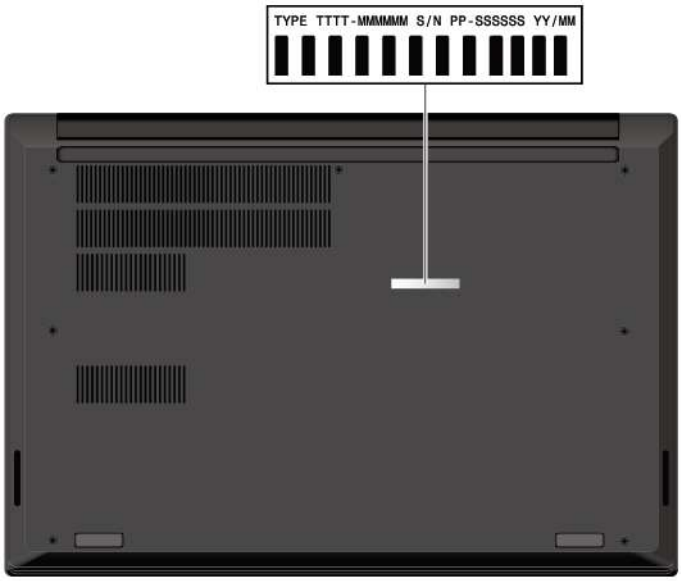

Lenovo Customer Support Center

During the warranty period, you can call Lenovo Customer Support Center for help.

Telephone numbers

For a list of the Lenovo Support phone numbers for your country or region, go to https://pcsupport.lenovo.com/supportphonelist for the latest phone numbers.

Note: Phone numbers are subject to change without notice. If the number for your country or region is not provided, contact your Lenovo reseller or Lenovo marketing representative.

Services available during the warranty period

- Problem determination - Trained personnel are available to assist you with determining if you have a hardware problem and deciding what action is necessary to fix the problem.
- Lenovo hardware repair - If the problem is determined to be caused by Lenovo hardware under warranty, trained service personnel are available to provide the applicable level of service.
- Engineering change management - Occasionally, there might be changes that are required after a product has been sold. Lenovo or your reseller, if authorized by Lenovo, will make selected Engineering Changes (ECs) that apply to your hardware available.

Services not covered

- Replacement or use of parts not manufactured for or by Lenovo or nonwarranted parts
- Identification of software problem sources
- Configuration of UEFI BIOS as part of an installation or upgrade
- Changes, modifications, or upgrades to device drivers
- Installation and maintenance of network operating systems (NOS)

- Installation and maintenance of programs

For the terms and conditions of the Lenovo Limited Warranty that apply to your Lenovo hardware product, go to:

- https://www.lenovo.com/warranty/llw_02
- https://pcsupport.lenovo.com/warrantylookup

Purchase additional services

During and after the warranty period, you can purchase additional services from Lenovo at https://www.lenovo.com/services.

Service availability and service name might vary by country or region.

Appendix A. Important safety information

Safety notices

This information can help you safely use your computer. Follow and retain all information included with your computer. The information in this document does not alter the terms of your purchase agreement or the Limited Warranty. For more information, see *Safety and Warranty Guide* that comes with your computer.

Customer safety is important. Our products are developed to be safe and effective. However, personal computers are electronic devices. Power cords, power adapters, and other features can create potential safety risks that can result in physical injury or property damage, especially if misused. To reduce these risks, follow the instructions included with your product, observe all warnings on the product and in the operating instructions, and review the information included in this document carefully. By carefully following the information contained in this document and provided with your product, you can help protect yourself from hazards and create a safer computer work environment.

Note: This information includes references to power adapters and batteries. In addition, some products (such as speakers and monitors) ship with external power adapters. If you have such a product, this information applies to your product. In addition, computer products contain a coin-sized internal battery that provides power to the system clock even when the computer is unplugged, so the battery safety information applies to all computer products.

Important information about using your computer

Ensure that you follow the important tips given here to get the most use and enjoyment out of your computer. Failure to do so might lead to discomfort or injury, or cause the computer to fail.

Protect yourself from the heat that your computer generates.

When your computer is turned on or the battery is charging, the base, the palm rest, and some other parts may become hot. The temperature they reach depends on the amount of system activity and the level of charge in the battery.

Extended contact with your body, even through clothing, could cause discomfort or even a skin burn.

- Avoid keeping your hands, your lap, or any other part of your body in contact with a hot section of the computer for any extended time.
- Periodically take your hands away from the keyboard by lifting your hands from the palm rest.

© Copyright Lenovo 2020

Protect yourself from the heat generated by the ac power adapter.

When the ac power adapter is connected to an electrical outlet and your computer, it generates heat.

Extended contact with your body, even through clothing, may cause a skin burn.

- Do not place the ac power adapter in contact with any part of your body while it is in use.
- Never use it to warm your body.
- Do not wrap the cords around the ac power adapter while in use.

Prevent your computer from getting wet.

To avoid spills and the danger of electrical shock, keep liquids away from your computer.

Protect the cables from being damaged.

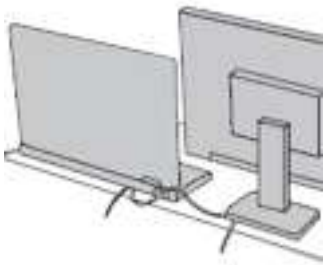

Applying strong force to cables may damage or break them.

Route communication lines, or the cables of an ac power adapter, a mouse, a keyboard, a printer, or any other electronic device, so that they cannot be walked on, tripped over, pinched by your computer or other objects, or in any way subject to treatment that could interfere with the operation of your computer.

Protect your computer and data when moving it.

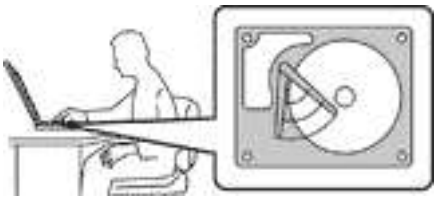

Before moving a computer equipped with a storage drive, do one of the following:

- Turn it off.
- Put it in sleep mode.
- Put it in hibernation mode.

This helps to prevent damage to the computer, and possible loss of data.

Handle your computer gently.

Do not drop, bump, scratch, twist, hit, vibrate, push, or place heavy objects on your computer, display, or external devices.

Carry your computer carefully.

- Use a quality carrying case that provides adequate cushioning and protection.
- Do not pack your computer in a tightly packed suitcase or bag.
- Before putting your computer in a carrying case, make sure that it is off, in sleep mode, or in hibernation mode. Do not put a computer in a carrying case while it is turned on.

Conditions that require immediate action

Products can become damaged due to misuse or neglect. Some product damage is serious enough that the product should not be used again until it has been inspected and, if necessary, repaired by an authorized servicer.

As with any electronic device, pay close attention to the product when it is turned on.

On very rare occasions, you might notice an odor or see a puff of smoke or sparks vent from your product. You might also hear sounds like popping, cracking, or hissing. These might merely mean that an internal electronic component has failed in a safe and controlled manner. Or, they might indicate a potential safety issue. Do not take risks or attempt to diagnose the situation yourself. Contact the Customer Support Center for further guidance. For a list of Service and Support phone numbers, see the following Web site:

https://pcsupport.lenovo.com/supportphonelist

Frequently inspect your computer and its components for damage, wear, or signs of danger. If you have any question about the condition of a component, do not use the product. Contact the Customer Support Center or the product manufacturer for instructions on how to inspect the product and have it repaired, if necessary.

In the unlikely event that you notice any of the following conditions, or if you have any safety concerns with your product, stop using the product and unplug it from the power source and telecommunication lines until you can speak to the Customer Support Center for further guidance.

- Power cords, plugs, power adapters, extension cords, surge protectors, or power supplies that are cracked, broken, or damaged.
- Signs of overheating, smoke, sparks, or fire.
- Damage to a battery (such as cracks, dents, or creases), discharge from a battery, or a buildup of foreign substances on the battery.
- A cracking, hissing, or popping sound, or strong odor that comes from the product.
- Signs that liquid has been spilled or an object has fallen onto the computer product, the power cord, or power adapter.
- The computer product, power cord, or power adapter has been exposed to water.
- The product has been dropped or damaged in any way.
- The product does not operate normally when you follow the operating instructions.

Note: If you notice these conditions with a product (such as an extension cord) that is not manufactured for or by Lenovo, stop using that product until you can contact the product manufacturer for further instructions, or until you get a suitable replacement.

Service and upgrades

Do not attempt to service a product yourself unless instructed to do so by the Customer Support Center or your documentation. Only use a Service Provider who is approved to repair your particular product.

Note: Some computer parts can be upgraded or replaced by the customer. Upgrades typically are referred to as options. Replacement parts approved for customer installation are referred to as Customer Replaceable Units, or CRUs. Lenovo provides documentation with instructions when it is appropriate for customers to install options or replace CRUs. You must closely follow all instructions when installing or replacing parts. The Off state of a power indicator does not necessarily mean that voltage levels inside a product are zero. Before you remove the covers from a product equipped with a power cord, always ensure that the power is turned off and that the product is unplugged from any power source. If you have any questions or concerns, contact the Customer Support Center.

Although there are no moving parts in your computer after the power cord has been disconnected, the following warnings are required for your safety.

Keep fingers and other parts of your body away from hazardous, moving parts. If you suffer an injury, seek medical care immediately.

Avoid contact with hot components inside the computer. During operation, some components become hot enough to burn the skin. Before you open the computer cover, turn off the computer, disconnect power, and wait approximately 10 minutes for the components to cool.

After replacing a CRU, reinstall all protective covers, including the computer cover, before connecting power and operating the computer. This action is important to help prevent unexpected electrical shock and help ensure the containment of an unexpected fire that could happen under extremely rare conditions.

When replacing CRUs, be cautious of sharp edges or corners that might cause injury. If you suffer an injury, seek medical care immediately.

Power cords and power adapters

DANGER

Use only the power cords and power adapters supplied by the product manufacturer.

The power cords shall be safety approved. For Germany, it shall be H03VV-F, 3G, 0.75 mm^2, or better. For other countries, the suitable types shall be used accordingly.

Never wrap a power cord around a power adapter or other object. Doing so can stress the cord in ways that can cause the cord to fray, crack, or crimp. This can present a safety hazard.

Always route power cords so that they will not be walked on, tripped over, or pinched by objects.

Protect power cords and power adapters from liquids. For instance, do not leave your power cord or power adapter near sinks, tubs, toilets, or on floors that are cleaned with liquid cleansers. Liquids can cause a short circuit, particularly if the power cord or power adapter has been stressed by misuse. Liquids also can cause gradual corrosion of power cord terminals and/or the connector terminals on a power adapter, which can eventually result in overheating.

Ensure that all power cord connectors are securely and completely plugged into receptacles.

Do not use any power adapter that shows corrosion at the ac input pins or shows signs of overheating (such as deformed plastic) at the ac input pins or anywhere on the power adapter.

Do not use any power cords where the electrical contacts on either end show signs of corrosion or overheating or where the power cord appears to have been damaged in any way.

To prevent possible overheating, do not cover the power adapter with clothing or other objects when the power adapter is plugged into an electrical outlet.

Extension cords and related devices

Ensure that extension cords, surge protectors, uninterruptible power supplies, and power strips that you use are rated to handle the electrical requirements of the product. Never overload these devices. If power strips are used, the load should not exceed the power strip input rating. Consult an electrician for more information if you have questions about power loads, power requirements, and input ratings.

Plugs and outlets

DANGER

If a receptacle (power outlet) that you intend to use with your computer equipment appears to be damaged or corroded, do not use the outlet until it is replaced by a qualified electrician.

Do not bend or modify the plug. If the plug is damaged, contact the manufacturer to obtain a replacement.

Do not share an electrical outlet with other home or commercial appliances that draw large amounts of electricity; otherwise, unstable voltage might damage your computer, data, or attached devices.

Some products are equipped with a three-pronged plug. This plug fits only into a grounded electrical outlet. This is a safety feature. Do not defeat this safety feature by trying to insert it into a non-grounded outlet. If you cannot insert the plug into the outlet, contact an electrician for an approved outlet adapter or to replace the outlet with one that enables this safety feature. Never overload an electrical outlet. The overall system load should not exceed 80 percent of the branch circuit rating. Consult an electrician for more information if you have questions about power loads and branch circuit ratings.

Be sure that the power outlet you are using is properly wired, easily accessible, and located close to the equipment. Do not fully extend power cords in a way that will stress the cords.

Be sure that the power outlet provides the correct voltage and current for the product you are installing.

Carefully connect and disconnect the equipment from the electrical outlet.

Power supply statement

Never remove the cover on a power supply or any part that has the following label attached.

Hazardous voltage, current, and energy levels are present inside any component that has this label attached. There are no serviceable parts inside these components. If you suspect a problem with one of these parts, contact a service technician.

External devices

CAUTION:
Do not connect or disconnect any external device cables other than Universal Serial Bus (USB) and 1394 cables while the computer power is on; otherwise, you might damage your computer. To avoid possible damage to attached devices, wait at least five seconds after the computer is shut down to disconnect external devices.

General battery notice

DANGER

Batteries supplied by Lenovo for use with your product have been tested for compatibility and should only be replaced with approved parts. A battery other than the one specified by Lenovo, or a disassembled or modified battery is not covered by the warranty.

Battery abuse or mishandling can cause overheat, liquid leakage, or an explosion. To avoid possible injury:

- **Do not open, dissemble, or service any battery.**
- **Do not crush or puncture the battery.**
- **Do not short-circuit the battery, or expose it to water or other liquids.**
- **Keep the battery away from children.**
- **Keep the battery away from fire.**

Stop using the battery if it is damaged, or if you notice any discharge or the buildup of foreign materials on the battery leads.

Store the rechargeable batteries or products containing the rechargeable batteries at room temperature, charged to approximately 30 to 50% of capacity. We recommend that the batteries be charged about once per year to prevent overdischarge.

Do not put the battery in trash that is disposed of in landfills. When disposing of the battery, comply with local ordinances or regulations.

Notice for built-in rechargeable battery

DANGER

Do not attempt to remove or replace the built-in rechargeable battery. Replacement of the battery must be done by a Lenovo-authorized repair facility or technician.

Only recharge the battery strictly according to instructions included in the product documentation.

The Lenovo-authorized repair facilities or technicians recycle Lenovo batteries according to local laws and regulations.

Lithium coin-cell battery notice

DANGER

Danger of explosion if battery is incorrectly replaced.

If the coin-cell battery is not a CRU, do not attempt to replace the coin-cell battery. Replacement of the battery must be done by a Lenovo-authorized repair facility or technician.

The Lenovo-authorized repair facilities or technicians recycle Lenovo batteries according to local laws and regulations.

When replacing the lithium coin-cell battery, use only the same type or equivalent type that is recommended by the manufacturer. The battery contains lithium and can explode if not properly used, handled, or disposed of. Swallowing the lithium coin-cell battery will cause chocking or severe internal burns in just two hours and might even result in death.

Keep batteries away from children. If the lithium coin-cell battery is swallowed or placed inside any part of the body, seek medical care immediately.

Do not:

- Throw or immerse into water
- Heat to more than 100 °C (212°F)
- Repair or disassemble
- Leave in an extremely low air pressure environment
- Leave in an extremely high-temperature environment
- Crush, puncture, cut, or incinerate

Dispose of the battery as required by local ordinances or regulations.

The following statement applies to users in the state of California, U.S.A.

California Perchlorate Information:

Products containing manganese dioxide lithium coin-cell batteries may contain perchlorate.

Perchlorate Material - special handling may apply, see https://www.dtsc.ca.gov/hazardouswaste/perchlorate/.

Heat and product ventilation

DANGER

Computers, ac power adapters, and many accessories can generate heat when turned on and when batteries are charging. Notebook computers can generate a significant amount of heat due to their compact size. Always follow these basic precautions:

- **When your computer is turned on or the battery is charging, the base, the palm rest, and some other parts may become hot. Avoid keeping your hands, your lap, or any other part of your body in contact with a hot section of the computer for any extended length of time. When you use the keyboard, avoid keeping your palms on the palm rest for a prolonged period of time. Your computer generates some heat during normal operation. The amount of heat depends on the amount of system activity and the battery charge level. Extended contact with your body, even through clothing, could cause discomfort or even a skin burn. Periodically take breaks from using the keyboard by lifting your hands from the palm rest; and be careful not to use the keyboard for any extended length of time.**
- **Do not operate your computer or charge the battery near flammable materials or in explosive environments.**
- **Ventilation slots, fans and/or heat sinks are provided with the product for safety, comfort, and reliable operation. These features might inadvertently become blocked by placing the product on a bed, sofa, carpet, or other flexible surface. Never block, cover, or disable these features.**
- **When the ac power adapter is connected to an electrical outlet and your computer, it generates heat. Do not place the adapter in contact with any part of your body while using it. Never use the ac power adapter to warm your body. Extended contact with your body, even through clothing, may cause a skin burn.**

For your safety, always follow these basic precautions with your computer:

- **Keep the cover closed whenever the computer is plugged in.**
- **Regularly inspect the outside of the computer for dust accumulation.**
- **Remove dust from vents and any perforations in the bezel. More frequent cleanings might be required for computers in dusty or high-traffic areas.**
- **Do not restrict or block any ventilation openings.**
- **Do not operate your computer inside furniture, as this might increase the risk of overheating.**
- **Airflow temperatures into the computer should not exceed 35°C (95°F).**

Electrical current safety information

DANGER

Electric current from power, telephone, and communication cables is hazardous.

To avoid a shock hazard:

- **Do not use your computer during a lightning storm.**
- **Do not connect or disconnect any cables or perform installation, maintenance, or reconfiguration of this product during an electrical storm.**
- **Connect all power cords to a properly wired and grounded electrical outlet.**
- **Connect properly wired outlets to any equipment that will be attached to this product.**
- **Whenever possible, use one hand only to connect or disconnect signal cables.**
- **Never turn on any equipment when there is evidence of fire, water, or structural damage.**
- **Disconnect the attached power cords, battery, and all the cables before you open the device covers, unless instructed otherwise in the installation and configuration procedures.**
- **Do not use your computer until all internal parts enclosures are fastened into place. Never use the computer when internal parts and circuits are exposed.**

DANGER

Connect and disconnect cables as described in the following procedures when installing, moving, or opening covers on this product or attached devices.

To connect:

1. **Turn everything OFF.**
2. **First, attach all cables to devices.**
3. **Attach signal cables to connectors.**
4. **Attach power cords to outlets.**
5. **Turn devices ON.**

To disconnect:

1. **Turn everything OFF.**
2. **First, remove power cords from outlets.**
3. **Remove signal cables from connectors.**
4. **Remove all cables from devices.**

The power cord must be disconnected from the wall outlet or receptacle before installing all other electrical cables connected to the computer.

The power cord may be reconnected to the wall outlet or receptacle only after all other electrical cables have been connected to the computer.

DANGER

During electrical storms, do not perform any replacement and do not connect the telephone cable to or disconnect it from the telephone outlet on the wall.

Liquid crystal display (LCD) notice

CAUTION:
The liquid crystal display (LCD) is made of glass, and rough handling or dropping the computer can cause the LCD to break. If the LCD breaks and the internal fluid gets into your eyes or on your hands, immediately wash the affected areas with water for at least 15 minutes; if any symptoms are present after washing, get medical care.

Note: For products with mercury-containing fluorescent lamps (for example, non-LED), the fluorescent lamp in the liquid crystal display (LCD) contains mercury; dispose of according to local, state, or federal laws.

Use earphones, headphones, or a headset

Excessive sound pressure from earphones and headphones can cause hearing loss. Adjustment of the equalizer to maximum increases the earphone and headphone output voltage and the sound pressure level. Therefore, to protect your hearing, adjust the equalizer to an appropriate level.

Excessive use of headphones or earphones for a long period of time at high volume can be dangerous if the output of the headphone or earphone connectors do not comply with specifications of EN 50332-2. The headphone output connector of your computer complies with EN 50332-2 Sub clause 7. This specification limits the computer's maximum wide band true RMS output voltage to 150 mV. To help protect against hearing loss, ensure that the headphones or earphones you use also comply with EN 50332-2 (Clause 7 limits) for a wide band characteristic voltage of 75 mV. Using headphones that do not comply with EN 50332-2 can be dangerous due to excessive sound pressure levels.

If your Lenovo computer came with headphones or earphones in the packaging, as a set, the combination of the headphones or earphones and the computer already complies with the specifications of EN 50332-1. If different headphones or earphones are used, ensure that they comply with EN 50332-1 (Clause 6.5 Limitation Values). Using headphones that do not comply with EN 50332-1 can be dangerous due to excessive sound pressure levels.

Choking hazard notice

CHOKING HAZARD – Product contains small parts.

Keep away from children under three years.

Plastic bag notice

DANGER

Plastic bags can be dangerous. Keep plastic bags away from babies and children to avoid danger of suffocation.

Glass parts notice

CAUTION:
Some parts of your product may be made of glass. This glass could break if the product is dropped on a hard surface or receives a substantial impact. If glass breaks, do not touch or attempt to remove it. Stop using your product until the glass is replaced by trained service personnel.

Static electricity prevention

Static electricity, although harmless to you, can seriously damage computer components and options. Improper handling of static-sensitive parts can damage the part. When you unpack an option or CRU, do not open the static-protective package containing the part until the instructions direct you to install it.

When you handle options or CRUs, or perform any work inside the computer, take the following precautions to avoid static-electricity damage:

- Limit your movement. Movement can cause static electricity to build up around you.
- Always handle components carefully. Handle adapters, memory modules, and other circuit boards by the edges. Never touch exposed circuitry.
- Prevent others from touching components.
- When you install a static-sensitive option or CRU, touch the static-protective packaging containing the part to a metal expansion-slot cover or other unpainted metal surface on the computer for at least two seconds. This reduces static electricity in the package and your body.
- When possible, remove the static-sensitive part from the static-protective packaging and install the part without setting it down. When this is not possible, place the static-protective packaging on a smooth, level surface and place the part on it.
- Do not place the part on the computer cover or other metal surface.

Operating environment

Maximum altitude (without pressurization)

3048 m (10 000 ft)

Temperature

- Operating: 5°C to 35°C (41°F to 95°F)
- Storage and transportation in original shipping packaging: -20°C to 60°C (-4°F to 140°F)
- Storage without packaging: 5°C to 43°C (41°F to 109°F)

Note: When you charge the battery, its temperature must be no lower than 10°C (50°F).

Relative humidity

- Operating: 8% to 95% at wet-bulb temperature 23°C (73°F)
- Storage and transportation: 5% to 95% at wet-bulb temperature 27°C (81°F)

Cleaning and maintenance

With appropriate care and maintenance, your computer will serve you reliably. The following topics offer information to help you keep your computer working with best performance.

Basic maintenance tips

Here are some basic points about keeping your computer functioning properly:

- If possible, place your computer in a well-ventilated and dry area without direct exposure to sunshine.
- Store packing materials safely out of the reach of children to prevent the risk of suffocation from plastic bags.
- Keep your computer away from magnets, activated cellular phones, electrical appliances, or speakers (more than 13 cm or 5 inches).
- Avoid subjecting your computer to extreme temperatures (below 5°C/41°F or above 35°C/95°F).
- Avoid placing any objects (including paper) between the display and the keyboard or the palm rest.
- Computer display might be designed to be opened and used at a certain angle. Do not open the display with force. Otherwise, the computer hinge might get damaged.
- Do not turn your computer over when the ac power adapter is plugged in, otherwise, it could break the adapter plug.
- Before moving your computer, be sure to remove any media, turn off attached devices, and disconnect cords and cables.
- When picking up your open computer, hold it by the bottom. Do not pick up or hold your computer by the display.
- Only an authorized Lenovo repair technician should disassemble and repair your computer.
- Do not modify or tape the latches to keep the display open or closed.
- Avoid directly exposing your computer and peripherals to the air from an appliance that can produce negative ions. Wherever possible, ground your computer to facilitate safe electrostatic discharge.

Clean your computer

It is a good practice to clean your computer periodically to protect the surfaces and ensure trouble-free operation.

Clean the computer cover: Wipe it with a lint-free cloth dampened in mild soap and water. Avoid applying liquids directly to the cover.

Clean the keyboard: Wipe the keys one by one with a lint-free cloth dampened in mild soap and water. If you wipe several keys at a time, the cloth might hook onto an adjacent key and possibly damage it. Avoid spraying cleaner directly onto the keyboard. To remove any crumbs or dust from beneath the keys, you can use a camera blower with a brush or use cool air from a hair dryer.

Clean the computer screen: Scratches, oil, dust, chemicals, and ultraviolet light can affect the performance of your computer screen. Use a dry, soft lint-free cloth to wipe the screen gently. If you see a scratchlike mark on your screen, it might be a stain. Wipe or dust the stain gently with a soft, dry cloth. If the stain remains, moisten a soft, lint-free cloth with water or eyeglass cleaner, but do not apply liquids directly to your computer screen. Ensure that the computer screen is dry before closing it.

Appendix B. Accessibility and ergonomic information

This chapter provides information about accessibility and ergonomics.

Accessibility information

Lenovo is committed to providing users who have hearing, vision, and mobility limitations with greater access to information and technology. This section provides information about the ways these users can get the most out of their computer experience. You also can get the most up-to-date accessibility information from the following Web site:

https://www.lenovo.com/accessibility

Keyboard shortcuts

The following list contains keyboard shortcuts that can help make your computer easier to use.

Note: Depending on your keyboard, some of the following keyboard shortcuts might not be available.

- **Windows logo key + U**: Open Ease of Access Center
- **Right Shift for eight seconds**: Turn on or turn off Filter Keys
- **Shift five times**: Turn on or turn off Sticky Keys
- **Num Lock for five seconds**: Turn on or turn off Toggle Keys
- **Left Alt+Left Shift+Num Lock**: Turn on or turn off Mouse Keys
- **Left Alt+Left Shift+PrtScn (or PrtSc)**: Turn on or turn off High Contrast

For more information, go to https://windows.microsoft.com, and then search using any of the following keywords: `keyboard shortcuts`, `key combinations`, `shortcut keys`.

Ease of Access Center

Ease of Access Center on the Windows operating system enables you to configure your computers to suit their physical and cognitive needs.

To access Ease of Access Center:

1. Go to **Control Panel** and view by Category.
2. Click **Ease of Access → Ease of Access Center**.
3. Choose the appropriate tool by following the on-screen instructions.

Ease of Access Center mainly includes the following tools:

- Magnifier

  Magnifier is a useful utility that enlarges the entire screen or part of the screen so that you can see the items better.
- Narrator

  Narrator is a screen reader that reads what is displayed on the screen aloud and describes events such as error messages.
- On-Screen Keyboard

  If you prefer to type or enter data into your computer using a mouse, joystick, or other pointing device instead of a physical keyboard, you can use On-Screen Keyboard. On-Screen Keyboard displays a visual

© Copyright Lenovo 2020

keyboard with all the standard keys. You can select keys using the mouse or another pointing device, or you can tap to select the keys if your computer supports multi-touch screen.

- High Contrast

  High Contrast is a feature that heightens the color contrast of some text and images on your screen. As a result, those items are more distinct and easier to identify.

- Personalized keyboard

  Adjust keyboard settings to make your keyboard easier to use. For example, you can use your keyboard to control the pointer and make the keyboard easier to type certain key combinations.

- Personalized mouse

  Adjust mouse settings to make your mouse easier to use. For example, you can change the pointer appearance and make your mouse easier to manage windows.

Speech Recognition

Speech Recognition enables you to control your computer by voice.

You can use verbal instructions to control the keyboard and mouse. With verbal instructions, you can start programs, open menus, click objects on the screen, dictate text into documents, and write and send e-mails.

To use Speech Recognition:

1. Go to **Control Panel** and view by Category.
2. Click **Ease of Access → Speech Recognition**.
3. Follow the on-screen instructions.

Screen-reader technologies

Screen-reader technologies are primarily focused on software program interfaces, help systems, and various online documents. For additional information about screen readers, see the following:

- Use PDFs with screen readers:

  https://www.adobe.com/accessibility.html?promoid=DJGVE

- Use the JAWS screen reader:

  https://www.freedomscientific.com/Products/Blindness/JAWS

- Use the NVDA screen reader:

  https://www.nvaccess.org/

Screen resolution

You can make the text and images on your screen easier to read by adjusting the screen resolution of your computer.

To adjust the screen resolution:

1. Right-click a blank area on the desktop and then click **Display settings → Display**.
2. Follow the on-screen instructions.

Note: Setting a resolution too low might prevent some items from fitting on the screen.

Customizable item size

You can make the items on your screen easier to read by changing the item size.

- To change the item size temporarily, use the Magnifier tool in Ease of Access Center.
- To change the item size permanently:

– Change the size of all the items on your screen.
  1. Right-click a blank area on the desktop and then click **Display settings → Display**.
  2. Change the item size by following the on-screen instructions. For some applications, your configuration might not take effect until you sign out and then sign in again.
– Change the size of the items on a Web page.

  Press and hold Ctrl, and then press the plus-sign key (+) to enlarge or the minus-sign key (–) to reduce the text size.
– Change the size of the items on the desktop or a window.

  Note: This function might not work on some windows.

  If your mouse has a wheel, press and hold Ctrl, and then scroll the wheel to change the item size.

Industry-standard connectors

Your computer provides industry-standard connectors that enable you to connect assistive devices.

Documentation in accessible formats

Lenovo provides electronic documentation in accessible formats, such as properly tagged PDF files or HyperText Markup Language (HTML) files. Lenovo electronic documentation is developed to ensure that visually impaired users can read the documentation through a screen reader. Each image in the documentation also includes adequate alternative text so that visually impaired users can understand the image when they use a screen reader.

Ergonomic information

Good ergonomic practice is important to get the most from your personal computer and to avoid discomfort. Arrange your workplace and the equipment you use to suit your individual needs and the kind of work that you perform. In addition, use healthy work habits to maximize your performance and comfort when using your computer.

Working in the virtual office might mean adapting to frequent changes in your environment. Adapting to the surrounding light sources, active seating, and the placement of your computer hardware, can help you improve your performance and achieve greater comfort.

This example shows someone in a conventional setting. Even when not in such a setting, you can follow many of these tips. Develop good habits, and they will serve you well.

General posture: Make minor modifications in your working posture to deter the onset of discomfort caused by long periods of working in the same position. Frequent short breaks from your work also help to prevent minor discomfort associated with your working posture.

Display: Position the display to maintain a comfortable viewing distance of 510 mm to 760 mm (20 inches to 30 inches). Avoid glare or reflections on the display from overhead lighting or outside sources of light. Keep the display screen clean and set the brightness to levels that enable you to see the screen clearly. Press the brightness control keys to adjust display brightness.

Head position: Keep your head and neck in a comfortable and neutral (vertical, or upright) position.

Chair: Use a chair that gives you good back support and seat height adjustment. Use chair adjustments to best suit your comfort posture.

Arm and hand position: If available, use chair arm rests or an area on your working surface to provide weight support for your arms. Keep your forearms, wrists, and hands in a relaxed and neutral (horizontal) position. Type with a soft touch without pounding the keys.

Leg position: Keep your thighs parallel to the floor and your feet flat on the floor or on a footrest.

What if you are traveling?

It might not be possible to observe the best ergonomic practices when you are using your computer while on the move or in a casual setting. Regardless of the setting, try to observe as many of the tips as possible. Sitting properly and using adequate lighting, for example, helps you maintain desirable levels of comfort and performance. If your work area is not in an office setting, ensure to take special note of employing active sitting and taking work breaks. Many product solutions are available to help you modify and expand your computer to best suit your needs. You can find some of these options at https://www.lenovo.com/accessories. Explore your options for docking solutions and external products that provide the adjustability and features that you want.

Questions about vision?

The visual display screens of notebook computers are designed to meet the highest standards. These visual display screens provide you with clear, crisp images and large, bright displays that are easy to see, yet easy on the eyes. Any concentrated and sustained visual activity can be tiring. If you have questions on eye fatigue or visual discomfort, consult a vision-care specialist for advice.

Appendix C. Compliance and TCO Certified information

This chapter provides regulatory, environmental, RoHS, and ENERGY STAR information about Lenovo products.

Radio frequency compliance statements

Computer models equipped with wireless communications comply with the radio frequency and safety standards of any country or region in which it has been approved for wireless use.

Besides this document, ensure that you read the *Regulatory Notice* for your country or region before using the wireless devices contained in your computer.

Wireless-related information

This topic provides wireless-related information about Lenovo products.

Wireless interoperability

Wireless-LAN card is designed to be interoperable with any wireless-LAN product that is based on Direct Sequence Spread Spectrum (DSSS), Complementary Code Keying (CCK), and/or Orthogonal Frequency Division Multiplexing (OFDM) radio technology, and is compliant to:

- The 802.11b/g Standard, 802.11a/b/g, 802.11n, 802.11ax, or 802.11ac on wireless-LANs, as defined by the Institute of Electrical and Electronics Engineers.
- The Wireless Fidelity (Wi-Fi®) certification as defined by the Wi-Fi Alliance®.

Notes:

- Some models may not support 802.11ax, depending on your wireless configurations.
- For some countries or regions, use of 802.11ax may be disabled according to your local regulations.

Usage environment and your health

This computer contains integrated wireless cards that operate within the guidelines identified by radio frequency (RF) safety standards and recommendations; therefore, Lenovo believes that this product is safe for use by consumers. These standards and recommendations reflect the consensus of the worldwide scientific community, and result from deliberations of panels and committees of scientists, who continually review and interpret the extensive research literature.

In some situations or environments, the use of wireless devices might be restricted by the proprietor of a building or responsible representatives of an organization. For example, these situations and areas might include the following:

- On board of airplanes, in hospitals or near petrol stations, blasting areas (with electro-explosive devices), medical implants or body-worn electronic medical devices, such as pace makers.
- In any other environment where the risk of interference to other devices or services is perceived or identified as harmful.

If you are uncertain of the policy that applies to the use of wireless devices in a specific area (such as an airport or hospital), you are encouraged to ask for authorization to use a wireless device prior to turning on the computer.

© Copyright Lenovo 2020

Locate the UltraConnect wireless antennas

Your computer has an UltraConnect™ wireless antenna system. You can enable wireless communication wherever you are.

The following illustration shows the antenna locations on your computer:

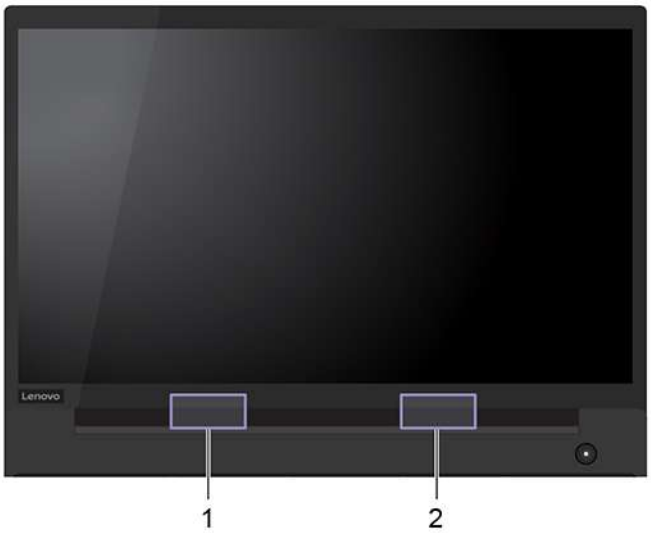

1. Wireless LAN antenna (auxiliary)
2. Wireless LAN antenna (main)

Locate wireless regulatory notices

For more information about the wireless regulatory notices, refer to the *Regulatory Notice* at https://support.lenovo.com.

European Union — compliance with the Radio Equipment Directive

This product is in conformity with all the requirements and essential norms that apply to EU Council Radio Equipment Directive 2014/53/EU on the approximation of the laws of the Member States relating to radio equipment. The full text of the system EU declaration of conformity is available at:

https://www.lenovo.com/us/en/compliance/eu-doc

Lenovo cannot accept responsibility for any failure to satisfy the protection requirements resulting from a non-recommended modification of the product, including the installation of option cards from other manufacturers. This product has been tested and found to comply with the limits for Class B equipment according to European Standards harmonized in the Directives in compliance. The limits for Class B equipment were derived for typical residential environments to provide reasonable protection against interference with licensed communication devices.

Brazil

Este equipamento não tem direito à proteção contra interferência prejudicial e não pode causar interferência em sistemas devidamente autorizados.

This equipment is not protected against harmful interference and may not cause interference with duly authorized systems.

Mexico

Advertencia: En Mexico la operación de este equipo está sujeta a las siguientes dos condiciones: (1) es posible que este equipo o dispositivo no cause interferencia perjudicial y (2) este equipo o dispositivo debe aceptar cualquier interferencia, incluyendo la que pueda causar su operación no deseada.

Singapore

Complies with
IMDA Standards
DB102306

Korea

무선설비 전파 혼신 **(사용주파수 2400～2483.5 , 5725～5825 무선제품해당)**

해당 무선설비가 전파혼신 가능성이 있으므로 인명안전과 관련된 서비스는 할 수 없음

SAR 정보

본 장치는 전파 노출에 대한 가이드라인을 충족합니다.

본 장치는 무선 송수신기 입니다. 본 장치는 국제 가이드라인으로 권장되는 전파 노출에 대한 제한을 초과하지 않도록 설계되었습니다. 장치 액세서리 및 최신 부품을 사용할 경우 SAR 값이 달라질 수 있 습니다. SAR 값은 국가 보고 및 테스트 요구 사항과 네트워크 대역에 따라 다를 수 있습니다. 본 장치 는 사람의 신체에서 20mm 이상의 거리에서 사용할 수 있습니다.

Environmental information of countries and regions

This section provides environmental, recycling, and RoHS information about Lenovo products.

Recycling and environmental information

Lenovo encourages owners of information technology (IT) equipment to responsibly recycle their equipment when it is no longer needed. Lenovo offers a variety of programs and services to assist equipment owners in recycling their IT products. For information about recycling Lenovo products, go to:

https://www.lenovo.com/recycling

The latest environmental information about our products is available at:

https://www.lenovo.com/ecodeclaration

Important WEEE information

The WEEE marking on Lenovo products applies to countries with WEEE and e-waste regulations (for example, the European WEEE Directive, India E-Waste Management Rules). Appliances are labeled in

accordance with local regulations concerning waste electrical and electronic equipment (WEEE). These regulations determine the framework for the return and recycling of used appliances as applicable within each geography. This label is applied to various products to indicate that the product is not to be thrown away, but rather put in the established collection systems for reclaiming these end of life products.

Users of electrical and electronic equipment (EEE) with the WEEE marking must not dispose of end of life EEE as unsorted municipal waste, but use the collection framework available to them for the return, recycle, and recovery of WEEE and to minimize any potential effects of EEE on the environment and human health due to the presence of hazardous substances. Lenovo electrical and electronic equipment (EEE) may contain parts and components, which at end-of-life might qualify as hazardous waste.

EEE and waste electrical and electronic equipment (WEEE) can be delivered free of charge to the place of sale or any distributor that sells electrical and electronic equipment of the same nature and function as the used EEE or WEEE.

For additional WEEE information, go to:

https://www.lenovo.com/recycling

WEEE information for Hungary

Lenovo, as a producer, bears the cost incurred in connection with the fulfillment of Lenovo's obligations under Hungary Law No. 197/2014 (VIII.1.) subsections (1)-(5) of section 12.

Japan recycling statements

Collect and recycle a disused Lenovo computer or monitor

If you are a company employee and need to dispose of a Lenovo computer or monitor that is the property of the company, you must do so in accordance with the Law for Promotion of Effective Utilization of Resources. Computers and monitors are categorized as industrial waste and should be properly disposed of by an industrial waste disposal contractor certified by a local government. In accordance with the Law for Promotion of Effective Utilization of Resources, Lenovo Japan provides, through its PC Collecting and Recycling Services, for the collecting, reuse, and recycling of disused computers and monitors. For details, visit the Lenovo Web site at:

https://www.lenovo.com/recycling/japan

Pursuant to the Law for Promotion of Effective Utilization of Resources, the collecting and recycling of home-used computers and monitors by the manufacturer was begun on October 1, 2003. This service is provided free of charge for home-used computers sold after October 1, 2003. For details, go to:

https://www.lenovo.com/recycling/japan

Dispose of Lenovo computer components

Some Lenovo computer products sold in Japan may have components that contain heavy metals or other environmental sensitive substances. To properly dispose of disused components, such as a printed circuit board or drive, use the methods described above for collecting and recycling a disused computer or monitor.

Dispose of disused lithium batteries from Lenovo computers

A button-shaped lithium battery is installed inside your Lenovo computer to provide power to the computer clock while the computer is off or disconnected from the main power source. If you need to replace it with a new one, contact your place of purchase or contact Lenovo for service. If you need to dispose of a disused lithium battery, insulate it with vinyl tape, contact your place of purchase or an industrial-waste-disposal operator, and follow their instructions.

Disposal of a lithium battery must comply with local ordinances and regulations.

Dispose of a disused battery from Lenovo notebook computers

Your Lenovo notebook computer has a lithium ion battery or a nickel metal hydride battery. If you are a company employee who uses a Lenovo notebook computer and need to dispose of a battery, contact the proper person in Lenovo sales, service, or marketing, and follow that person's instructions. You also can refer to the instructions at:

https://www.lenovo.com/jp/ja/environment/recycle/battery/

If you use a Lenovo notebook computer at home and need to dispose of a battery, you must comply with local ordinances and regulations. You also can refer to the instructions at:

https://www.lenovo.com/jp/ja/environment/recycle/battery/

Recycling information for Brazil

Declarações de Reciclagem no Brasil

Descarte de um Produto Lenovo Fora de Uso

Equipamentos elétricos e eletrônicos não devem ser descartados em lixo comum, mas enviados à pontos de coleta, autorizados pelo fabricante do produto para que sejam encaminhados e processados por empresas especializadas no manuseio de resíduos industriais, devidamente certificadas pelos orgãos ambientais, de acordo com a legislação local.

A Lenovo possui um canal específico para auxiliá-lo no descarte desses produtos. Caso você possua um produto Lenovo em situação de descarte, ligue para o nosso SAC ou encaminhe um e-mail para: reciclar@lenovo.com, informando o modelo, número de série e cidade, a fim de enviarmos as instruções para o correto descarte do seu produto Lenovo.

Battery recycling information for the European Union

Notice: This mark applies only to countries within the European Union (EU).

Batteries or packaging for batteries are labeled in accordance with European Directive 2006/66/EC concerning batteries and accumulators and waste batteries and accumulators. The Directive determines the framework for the return and recycling of used batteries and accumulators as applicable throughout the European Union. This label is applied to various batteries to indicate that the battery is not to be thrown away, but rather reclaimed upon end of life per this Directive.

In accordance with the European Directive 2006/66/EC, batteries and accumulators are labeled to indicate that they are to be collected separately and recycled at end of life. The label on the battery may also include a chemical symbol for the metal concerned in the battery (Pb for lead, Hg for mercury, and Cd for cadmium). Users of batteries and accumulators must not dispose of batteries and accumulators as unsorted municipal waste, but use the collection framework available to customers for the return, recycling, and treatment of batteries and accumulators. Customer participation is important to minimize any potential effects of batteries

and accumulators on the environment and human health due to the potential presence of hazardous substances.

Before placing electrical and electronic equipment (EEE) in the waste collection stream or in waste collection facilities, the end user of equipment containing batteries and/or accumulators must remove those batteries and accumulators for separate collection.

Dispose of lithium batteries and battery packs from Lenovo products

A coin-cell type lithium battery might be installed inside your Lenovo product. You can find details about the battery in the product documentation. If the battery needs to be replaced, contact your place of purchase or contact Lenovo for service. If you need to dispose of a lithium battery, insulate it with vinyl tape, contact your place of purchase or a waste-disposal operator, and follow their instructions.

Dispose of battery packs from Lenovo products

Your Lenovo device might contain a lithium-ion battery pack or a nickel metal hydride battery pack. You can find details on the battery pack in the product documentation. If you need to dispose of a battery pack, insulate it with vinyl tape, contact Lenovo sales, service, or your place of purchase, or a waste-disposal operator, and follow their instructions. You also can refer to the instructions provided in the user guide for your product.

For proper collection and treatment, go to:

https://www.lenovo.com/environment

Recycling information for mainland China

《废弃电器电子产品回收处理管理条例》提示性说明

联想鼓励拥有联想品牌产品的用户当不再需要此类产品时，遵守国家废弃电器电子产品回收处理相关法律法规，将其交给当地具有国家认可的回收处理资质的厂商进行回收处理。更多回收服务信息，请点击进入http://support.lenovo.com.cn/activity/551.htm

Battery recycling information for Taiwan

廢電池請回收

Battery recycling information for the United States and Canada

US & Canada Only

Restriction of Hazardous Substances (RoHS) Directive of countries and regions

The latest environmental information about Lenovo products is available at:

https://www.lenovo.com/ecodeclaration

European Union RoHS

This Lenovo product, with included parts (cables, cords, and so on) meets the requirements of Directive 2011/65/EU on the restriction of the use of certain hazardous substances in electrical and electronic equipment ("RoHS recast" or "RoHS 2").

For more information about Lenovo worldwide compliance on RoHS, go to:

https://www.lenovo.com/rohs-communication

Turkish WEEE / RoHS

Türkiye AEEE Yönetmeliğine Uygunluk Beyanı

Bu Lenovo ürünü, T.C. Çevre ve Orman Bakanlığı'nın “Atık Elektrik ve Elektronik Eşyalarda Bazı Zararlı Maddelerin Kullanımının Sınırlandırılmasına Dair Yönetmelik (AEEE)” direktiflerine uygundur.

AEEE Yönetmeliğine Uygundur.

Ukraine RoHS

Цим підтверджуємо, що продукція Леново відповідає вимогам нормативних актів України, які обмежують вміст небезпечних речовин

India RoHS

RoHS compliant as per E-Waste (Management) Rules.

Mainland China RoHS

The information in the following table is applicable to products manufactured on or after January 1, 2015 for sale in the People’s Republic of China.

产品中有害物质的名称及含量

部件名称	铅（Pb）	汞（Hg）	镉（Cd）	六价铬（Cr（VI））	多溴联苯（PBB）	多溴二苯醚（PBDE）
印刷电路板组件	X	O	O	O	O	O
硬盘	X	O	O	O	O	O
光驱	X	O	O	O	O	O
LCD 面板（LED 背光源）	X	O	O	O	O	O
键盘	X	O	O	O	O	O
内存	X	O	O	O	O	O
电池	X	O	O	O	O	O
电源适配器	X	O	O	O	O	O
底壳、顶盖和扬声器	X	O	O	O	O	O

注：
本表依据SJ/T 11364的规定编制。

O：表示该有害物质在该部件所有均质材料中的含量均在 GB/T 26572标准规定的限量要求以下。

X：表示该有害物质至少在该部件的某一均质材料中的含量超出GB/T 26572标准规定的限量要求。标有“X”的部件，皆因全球技术发展水平限制而无法实现有害物质的替代。印刷电路板组件包括印刷电路板（PCB）及其组件、集成电路（IC）和连接器。某些型号的产品可能不包含上表中的某些部件，请以实际购买机型为准。

图示：

在中华人民共和国境内销售的电子信息产品上将印有“环保使用期限”（EPuP）符号。圆圈中的数字代表产品的正常环保使用期限。

Taiwan RoHS

單元 Unit	限用物質及其化學符號 Restricted substances and its chemical symbols					
	鉛Lead (Pb)	汞Mercury (Hg)	鎘Cadmium (Cd)	六價鉻 Hexavalent chromium (Cr^{+6})	多溴聯苯 Polybrominated biphenyls (PBB)	多溴二苯醚 Polybrominated diphenyl ethers (PBDE)
印刷電路板組件	–	○	○	○	○	○
硬碟機	–	○	○	○	○	○
LCD面板（LED背光源）	–	○	○	○	○	○
鍵盤	–	○	○	○	○	○
記憶體	–	○	○	○	○	○
電源供應器	–	○	○	○	○	○
底殼、頂蓋和喇叭	–	○	○	○	○	○
麥克風	–	○	○	○	○	○
攝影機	–	○	○	○	○	○
風扇	–	○	○	○	○	○
分離式電源線組	–	○	○	○	○	○
固態硬碟	–	○	○	○	○	○

備考1. 〝超出0.1 wt %〞及〝超出0.01 wt %〞係指限用物質之百分比含量超出百分比含量基準值。

Note 1：“Exceeding 0.1 wt %” and “exceeding 0.01 wt %” indicate that the percentage content of the restricted substance exceeds the reference percentage value of presence condition.

備考2. 〝○〞係指該項限用物質之百分比含量未超出百分比含量基準值。

Note 2：“○” indicates that the percentage content of the restricted substance does not exceed the percentage of reference value of presence.

備考3. 〝－〞係指該項限用物質為排除項目。

Note 3：The “–” indicates that the restricted substance corresponds to the exemption.

Electromagnetic emission notices

Federal Communications Commission (FCC) Supplier’s Declaration of Conformity

The following information refers to the following products:

- ThinkPad E14, machine types: 20RA, 20RB, 20WF and 20WG
- ThinkPad R14, machine type: 20RC
- ThinkPad S3 Gen 2, machine type: 20RG
- ThinkPad E15, machine types: 20RD and 20RE

This equipment has been tested and found to comply with the limits for a Class B digital device, pursuant to Part 15 of the FCC Rules. These limits are designed to provide reasonable protection against harmful interference in a residential installation. This equipment generates, uses, and can radiate radio frequency energy and, if not installed and used in accordance with the instructions, may cause harmful interference to radio communications. However, there is no guarantee that interference will not occur in a particular installation. If this equipment does cause harmful interference to radio or television reception, which can be determined by turning the equipment off and on, the user is encouraged to try to correct the interference by one or more of the following measures:

- Reorient or relocate the receiving antenna.
- Increase the separation between the equipment and receiver.
- Connect the equipment into an outlet on a circuit different from that to which the receiver is connected.
- Consult an authorized dealer or service representative for help.

Lenovo is not responsible for any radio or television interference caused by using other than recommended cables and connectors or by unauthorized changes or modifications to this equipment. Unauthorized changes or modifications could void the user's authority to operate the equipment.

This device complies with Part 15 of the FCC Rules. Operation is subject to the following two conditions: (1) this device may not cause harmful interference, and (2) this device must accept any interference received, including interference that may cause undesired operation.

Responsible Party:
Lenovo (United States) Incorporated
7001 Development Drive
Morrisville, NC 27560
Email: FCC@lenovo.com

FCC ID and IC Certification information

You can find the FCC and IC Certification information through one of the following methods:

- Through an electronic-label screen (E-label screen) preinstalled on your computer. To view the E-label screen, see "Regulatory labels" on page 86.
- On a physical label attached to the outside of your computer shipping carton.

Industry Canada compliance statement

CAN ICES-3(B)/NMB-3(B)

European Union conformity

EU Contact: Lenovo (Slovakia), Landererova 12, 811 09 Bratislava, Slovakia

Compliance with the EMC Directive

This product is in conformity with the protection requirements of EU Council Directive 2014/30/EU on the approximation of the laws of the Member States relating to electromagnetic compatibility.

This product has been tested and found to comply with the limits for Class B equipment according to European Standards harmonized in the Directives in compliance. The Class B requirements for equipment are intended to offer adequate protection to broadcast services within residential environments.

EU ErP (EcoDesign) Directive (2009/125/EC) - external power adapters (Regulation (EU) 2019/1782)

Lenovo products are designed to work with a range of compatible power adapters. Access https://www.lenovo.com/us/en/compliance/eu-doc to view the compatible power adapters. For the detailed power adapter specifications for your computer, go to https://support.lenovo.com.

German Class B compliance statement

Hinweis zur Einhaltung der Klasse B zur elektromagnetischen Verträglichkeit

Dieses Produkt entspricht den Schutzanforderungen der EU-Richtlinie zur elektromagnetischen Verträglichkeit Angleichung der Rechtsvorschriften über die elektromagnetische Verträglichkeit in den EU-Mitgliedsstaaten und hält die Grenzwerte der Klasse B der Norm gemäß Richtlinie.

Um dieses sicherzustellen, sind die Geräte wie in den Handbüchern beschrieben zu installieren und zu betreiben. Des Weiteren dürfen auch nur von der Lenovo empfohlene Kabel angeschlossen werden. Lenovo übernimmt keine Verantwortung für die Einhaltung der Schutzanforderungen, wenn das Produkt ohne Zustimmung der Lenovo verändert bzw. wenn Erweiterungskomponenten von Fremdherstellern ohne Empfehlung der Lenovo gesteckt/eingebaut werden.

Zulassungsbescheinigung laut dem Deutschen Gesetz über die elektromagnetische Verträglichkeit von Betriebsmitteln, EMVG vom 20. Juli 2007 (früher Gesetz über die elektromagnetische Verträglichkeit von Geräten), bzw. der EU Richtlinie 2014/30/EU, der EU Richtlinie 2014/53/EU Artikel 3.1b), für Geräte der Klasse B.

Dieses Gerät ist berechtigt, in Übereinstimmung mit dem Deutschen EMVG das EG-Konformitätszeichen - CE - zu führen. Verantwortlich für die Konformitätserklärung nach Paragraf 5 des EMVG ist die Lenovo (Deutschland) GmbH, Meitnerstr. 9, D-70563 Stuttgart.

Japan VCCI Class B compliance statement

この装置は、クラスB機器です。この装置は、住宅環境で使用することを目的としていますが、この装置がラジオやテレビジョン受信機に近接して使用されると、受信障害を引き起こすことがあります。
取扱説明書に従って正しい取り扱いをして下さい。

VCCI-B

Japan compliance statement for products which connect to the power mains with rated current less than or equal to 20 A per phase

日本の定格電流が 20A/相 以下の機器に対する高調波電流規制
高調波電流規格 JIS C 61000-3-2 適合品

Japan notice for ac power cord

The ac power cord shipped with your product can be used only for this specific product. Do not use the ac power cord for other devices.

本製品およびオプションに電源コード・セットが付属する場合は、
それぞれ専用のものになっていますので他の電気機器には使用し
ないでください。

Other compliance and TCO Certified information of countries and regions

This section provides other compliance information about Lenovo products.

Certification-related information

Product name	Compliance ID	Machine type(s)
ThinkPad E14	TP00116A TP00116B *	20RA, 20RB, 20WF and 20WG
ThinkPad R14	TP00116A TP00116B*	20RC
ThinkPad S3 Gen 2	TP00116A TP00116B*	20RG
ThinkPad E15	TP00117A TP00117B*	20RD and 20RE

* for India discrete graphics model

The latest compliance information is available at:

https://www.lenovo.com/compliance

Regulatory labels

Depending on your country or region, you can find the government-required regulatory information through one of the following methods:

- On a physical label attached to the outside of your computer shipping carton
- On a physical label attached to your computer
- Through an electronic-label screen (E-label screen) preinstalled on your computer

To access the E-label screen, restart the computer. When the logo screen is displayed, press F9, or tap the prompt to enter the Startup Interrupt menu and the Regulatory Information option subsequently.

Korean E-label notice

이 제품은 전자적표시(e-labelling)가 되어있습니다.

TCO Certified

Selected models are TCO Certified and bear the TCO Certified logo.

Note: TCO Certified is an international third-party sustainability certification for IT products. For details, go to https://www.lenovo.com/us/en/compliance/tco.

Export classification notice

This product is subject to the United States Export Administration Regulations (EAR) and has an Export Classification Control Number (ECCN) of 5A992.c. It can be re-exported except to any of the embargoed countries in the EAR E1 country list.

Lenovo product service information for Taiwan

委製商/進口商名稱: 荷蘭商聯想股份有限公司台灣分公司
進口商地址: 台北市中山區樂群三路128號16樓
進口商電話: 0800-000-702 (代表號)

Taiwan precautionary vision statement

警語：使用過度恐傷害視力

注意事項：

- 使用30分鐘請休息10分鐘。
- 未滿2歲幼兒不看螢幕，2歲以上每天看螢幕不要超過1小時。

Supplemental information for the Eurasian Union

Назначение	персональный компьютер для личного и служебного использования, для передачи данных, с поддержкой различных профилей подключения (Wi-Fi, Bluetooth и пр.).
Изготовитель	Леново ПЦ ХК Лимитед, 23/Ф Линколн Хаус, Тайку Плэйс 979 Кингз Роуд, Куарри Бэй, Гонконг (Lenovo PC HK Limited, 23/F Lincoln House, Taikoo Place 979 King's Road, Quarry Bay, Hong Kong)
Страна производства	Китай
Наименование и местонахождение уполномоченного изготовителем лица	ООО «Леново (Восточная Европа/Азия)» 143401, Московская область, г. Красногорск, бульвар Строителей, дом 4, корпус 1, помещение VII, тел. +7 495 645 83 38, факс +7 495 645 78 77.
Импортер	Наименование, адрес импортера и информация для связи с ним указаны на этикетке* на упаковке продукции. **Согласно ГОСТ 2.601-2013 «Единая система конструкторской документации. Эксплуатационные документы», пункт 5.1, подпункт 5.1.2, этикетка является видом эксплуатационных документов.*
Дата изготовления (месяц и год)	Указана на этикетке* на упаковке продукции, в графе Date (дата указана в формате год-месяц-дата). Для получения более подробной информации посетите веб-сайт: https://support.lenovo.com
Единый знак обращения на рынке стран Таможенного союза	EAC

Brazil audio notice

Ouvir sons com mais de 85 decibéis por longos períodos pode provocar danos ao sistema auditivo.

ENERGY STAR model information

ENERGY STAR is a joint program of the U.S. Environmental Protection Agency and the U.S. Department of Energy aimed at saving money and protecting the environment through energy efficient products and practices.

Lenovo is proud to offer products with the ENERGY STAR certified designation. Lenovo computers, if carry an ENERGY STAR mark, have been designed and tested to conform to the ENERGY STAR program

requirements for computers as prescribed by the U.S. Environmental Protection Agency. For a certified computer, an ENERGY STAR mark may be affixed to the product, the product packaging, or displayed electronically on the E-label screen or the power settings interface.

By using ENERGY STAR compliant products and taking advantage of the power management features of your computer, you reduce the consumption of electricity. Reduced electrical consumption contributes to potential financial savings, a cleaner environment, and the reduction of greenhouse gas emissions. For more information about ENERGY STAR, go to https://www.energystar.gov.

Lenovo encourages you to make efficient use of energy an integral part of your day-to-day operations. To help in this endeavor, Lenovo has preset a default power plan. To change the power plan, see “Set the power plan” on page 22.

Appendix D. Notices and trademarks

Notices

Lenovo may not offer the products, services, or features discussed in this document in all countries. Consult your local Lenovo representative for information on the products and services currently available in your area. Any reference to a Lenovo product, program, or service is not intended to state or imply that only that Lenovo product, program, or service may be used. Any functionally equivalent product, program, or service that does not infringe any Lenovo intellectual property right may be used instead. However, it is the user's responsibility to evaluate and verify the operation of any other product, program, or service.

Lenovo may have patents or pending patent programs covering subject matter described in this document. The furnishing of this document does not give you any license to these patents. You can send license inquiries, in writing, to:

Lenovo (United States), Inc.
8001 Development Drive
Morrisville, NC 27560
U.S.A.
Attention: Lenovo Director of Licensing

LENOVO PROVIDES THIS PUBLICATION "AS IS" WITHOUT WARRANTY OF ANY KIND, EITHER EXPRESS OR IMPLIED, INCLUDING, BUT NOT LIMITED TO, THE IMPLIED WARRANTIES OF NON-INFRINGEMENT, MERCHANTABILITY OR FITNESS FOR A PARTICULAR PURPOSE. Some jurisdictions do not allow disclaimer of express or implied warranties in certain transactions, therefore, this statement may not apply to you.

Changes are made periodically to the information herein; these changes will be incorporated in new editions of the publication. To provide better service, Lenovo reserves the right to improve and/or modify the products and software programs described in the manuals included with your computer, and the content of the manual, at any time without additional notice.

The software interface and function and hardware configuration described in the manuals included with your computer might not match exactly the actual configuration of the computer that you purchase. For the configuration of the product, refer to the related contract (if any) or product packing list, or consult the distributor for the product sales. Lenovo may use or distribute any of the information you supply in any way it believes appropriate without incurring any obligation to you.

The products described in this document are not intended for use in implantation or other life support applications where malfunction may result in injury or death to persons. The information contained in this document does not affect or change Lenovo product specifications or warranties. Nothing in this document shall operate as an express or implied license or indemnity under the intellectual property rights of Lenovo or third parties. All information contained in this document was obtained in specific environments and is presented as an illustration. The result obtained in other operating environments may vary.

Lenovo may use or distribute any of the information you supply in any way it believes appropriate without incurring any obligation to you.

Any references in this publication to non-Lenovo Web sites are provided for convenience only and do not in any manner serve as an endorsement of those Web sites. The materials at those Web sites are not part of the materials for this Lenovo product, and use of those Web sites is at your own risk.

© Copyright Lenovo 2020

Any performance data contained herein was determined in a controlled environment. Therefore, the result obtained in other operating environments may vary significantly. Some measurements may have been made on development-level systems and there is no guarantee that these measurements will be the same on generally available systems. Furthermore, some measurements may have been estimated through extrapolation. Actual results may vary. Users of this document should verify the applicable data for their specific environment.

This document is copyrighted by Lenovo and is not covered by any open source license, including any Linux agreement(s) which may accompany software included with this product. Lenovo may update this document at any time without notice.

For the latest information or any questions or comments, contact or visit the Lenovo Web site:

https://support.lenovo.com

Trademarks

LENOVO, LENOVO logo, THINKPAD, THINKPAD logo, TRACKPOINT, and ULTRACONNECT are trademarks of Lenovo. Intel, and Intel Optane are trademarks of Intel Corporation or its subsidiaries in the U.S. and/or other countries. Microsoft, Windows, Direct3D, BitLocker, and Cortana are trademarks of the Microsoft group of companies. The terms HDMI and HDMI High-Definition Multimedia Interface are trademarks or registered trademarks of HDMI Licensing LLC in the United States and other countries. Linux is the registered trademark of Linus Torvalds in the U.S. and other countries. Ubuntu is a registered trademark of Canonical Ltd. “Fedora” is a registered trademark of Red Hat, Inc. Wi-Fi, Wi-Fi Alliance, and Miracast are registered trademarks of Wi-Fi Alliance. USB-C is a trademark of USB Implementers Forum. All other trademarks are the property of their respective owners. © 2020 Lenovo.

Lenovo